BID SET

VILLAGE OF LOWELLVILLE

YOUNGSTOWN-LOWELLVILLE ROAD STORM SEWER IMPROVEMENTS LOWELLVILLE, OHIO

OPWC PROJECT No. CT26Z

NOVEMBER 2024

Sheet List Table	
Sheet Number	Sheet Title
01	COVER SHEET
02	GENERAL NOTES
03	LEGENDS & SYMBOLOGY
04	CONSTRUCTION DETAILS - 01
05	CONSTRUCTION DETAILS - 02
06	CONSTRUCTION DETAILS - 03
07	CONSTRUCTION DETAILS - 04
08	MAINTENANCE OF TRAFFIC-01
09	MAINTENANCE OF TRAFFIC-02
10	SURVEY CONTROL
11	EXISTING CONDITIONS
12	PLAN AND PROFILE - 01
13	PLAN AND PROFILE - 02
14	E&SC DETAILS - 01

LOCATION MAP
NOT TO SCALE

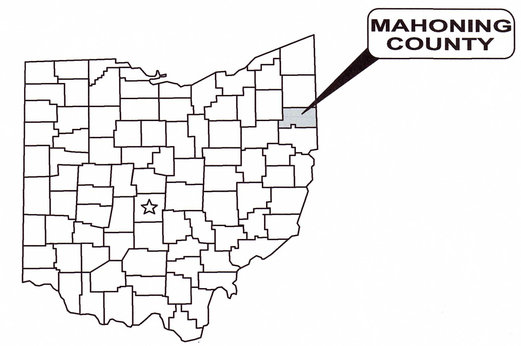

OUPS DESIGN SERIAL NUMBERS:

A220604147-00A
A220604173-00A
A225702689-00A

OUPS UTILITY LIST:

DOMINION EAST OHIO (GAS)
320 SPRINGSIDE DR. SUITE 320
AKRON, OHIO 44333
(330) 664-2409

AQUA OHIO, INC. (WATER)
6650 SOUTH AVENUE
BOARDMAN, OHIO 44512
(330) 726-8151

OHIO EDISON COMPANY (ELECTRIC)
730 SOUTH AVENUE
YOUNGSTOWN, OHIO 44502-2011
(330) 501-1078

AT&T OHIO (COMMUNICATIONS)
50 W. BOWERY STREET
AKRON, OH 44308
(330) 384-8557

WINDSTREAM OHIO
2165 STATE ROUTE 133 SOUTH
BLANCHESTER, OH 45107
(937) 725-5358

CENTURYLINK
1 WEST FEDERAL STREET RM. 1000
YOUNGSTOWN, OH 44503
(330) 623-5016

OHIO Utilities Protection SERVICE
Call Before You Dig
1-800-362-2764
CALL TWO WORKING DAYS BEFORE YOU DIG
(NON MEMBERS MUST BE CALLED DIRECTLY)

1. UNDERGROUND BUILDING SERVICE UTILITY LINES ARE NOT SHOWN ON THE PLANS. THE CONTRACTOR SHALL BE RESPONSIBLE FOR LOCATING, MAINTAINING AND REPLACING AS NECESSARY TO ENSURE CONTINUAL SERVICE TO BUILDINGS.
2. THE CONTRACTOR IS RESPONSIBLE TO CALL OHIO UTILITIES PROTECTION SERVICE @ 1-800-362-2764, THREE WORKING DAYS PRIOR TO CONSTRUCTION.
3. THE CONTRACTOR IS RESPONSIBLE TO COORDINATE THEIR EFFORTS WITH THE LISTED OUPS ONE CALL UTILITIES AS WELL AS ANY ENCOUNTERED UTILITIES THAT MAY BE UNLISTED.

CT consultants
engineers • architects • planners
A Verdantas Company

ENGINEER'S PROJECT No. 220549

APPROVALS:

MAYOR — JAMES IUDICIANI SR. — DATE 11/27/2024

VILLAGE ADMINISTRATOR — JOANN ESENWEIN — DATE 11/27/2024

CLERK TREASURER — TINA STRAIGHT — DATE 11/27/2024

COUNCIL MEMBERS:

ROBERT COPPOLA
DON D'ONOFRIO
JOSEPH DONATELLI
RYAN MCNICHOLAS
KEITH McCAUGHTRY
RONALD ROTUNNO

PLANS PEPARED BY:

STATE OF OHIO — CHRISTOPHER MICHAEL KOGELNIK — E-70064 — REGISTERED — PROFESSIONAL ENGINEER

CHRISTOPHER M. KOGELNIK, P.E. — DATE 11/27/24

CT consultants
engineers • architects • planners
A Verdantas Company

NO	REVISION	DATE

SCALE: AS SHOWN
DATE: 08/01/2023
DESIGNED BY: CMK
DRAWN BY: AMM
CHECKED BY: CMK

VILLAGE OF LOWELLVILLE
YOUNGSTOWN-LOWELLVILLE RD. STORM SEWER IMPROVEMENTS
VILLAGE OF LOWELLVILLE, OHIO

COVER SHEET

PROJECT NO: 220549
DRAWING NAME: CS
SHEET 01 OF 14

H:\2022\220549\DWG\SHEETS\G_220549 – COVER SHEET.DWG – SHEET NAME – 11/18/2024 1:18:51 PM – ASHLEIGH MISCH

GENERAL NOTES:

PRE-CONSTRUCTION CONFERENCE:

1. AT LEAST FIVE DAYS PRIOR TO THE START OF ACTUAL CONSTRUCTION WORK, A PRE-CONSTRUCTION CONFERENCE WILL BE HELD AT A TIME MUTUALLY AGREEABLE TO THE PARTICIPANTS. THE PROJECT ENGINEER, APPROPRIATE VILLAGE, TOWNSHIP, AND COUNTY OFFICIALS, THE CONTRACTOR, AND REPRESENTATIVES OF THE UTILITY COMPANIES SHALL ATTEND THE MEETING.

CONSTRUCTION OBSERVATION:

1. THE CONTRACTOR SHALL NOT COMMENCE WITH ANY FORM OF CONSTRUCTION WITHOUT CONTACTING CT CONSULTANTS, INC. (330) 746-1200 A MINIMUM OF 48 HOURS IN ADVANCE OF CONSTRUCTION ACTIVITY TO ARRANGE FOR OBSERVATION. IF ANY CHANGE IN WORK SCHEDULE BECOMES NECESSARY, IT WILL BE THE RESPONSIBILITY OF THE CONTRACTOR TO CONTACT CT CONSULTANTS, INC. TO AVOID UNNECESSARY OBSERVATION COSTS. IF NO NOTIFICATION IS MADE IN REGARDS TO CANCELLATION OF WORK, THE CONTRACTOR WILL BE CHARGED FOR THE TIME INCURRED.

HOURS OF CONSTRUCTION:

1. ALL CONSTRUCTION ACTIVITIES SHALL BE PERFORMED FROM 7:00 A.M. TO 7:00 P.M. MONDAY THROUGH FRIDAY, UNLESS OTHERWISE APPROVED BY THE VILLAGE AND THE ENGINEER.

RECORD DRAWINGS:

1. THE CONTRACTOR SHALL PROVIDE NEAT RED-LINED AS-BUILT DRAWINGS DETAILING CONSTRUCTION IMPROVEMENTS; INTERNAL INSPECTION VIDEO/AUDIO USB FLASH DRIVES, STORAGE CASES, VIDEO LOGS, AND INDEXES, INFILTRATION/EXFILTRATION TEST RESULTS AND MANDREL TEST RESULTS (FOR ALL FLEXIBLE CONDUITS.)

2. THE CONTRACTOR SHALL SUBMIT AS-BUILT DRAWINGS TO THE ENGINEER WITHIN 30 CALENDAR DAYS OF THE ISSUANCE OF THE CERTIFICATION OF SUBSTANTIAL COMPLETION OR PRIOR TO THE SUBMISSION OF THE FINAL PAYMENT APPLICATION, WHICH EVER OCCURS FIRST.

CONSTRUCTION AREA:

1. THE CONTRACTOR SHALL WORK WITHIN DESIGNATED STREET RIGHTS-OF-WAY, UTILITY EASEMENTS, AND CONSTRUCTION EASEMENTS WHILE CONSTRUCTING THIS PROJECT UNLESS OTHERWISE DIRECTED BY THE ENGINEER. THE CONTRACTOR SHALL MINIMIZE LAND AND PROPERTY DISTURBANCE WITHIN SAID RIGHTS-OF-WAY AND EASEMENTS.

PRESERVATION OF MONUMENTS:

1. THE CONTRACTOR SHALL PRESERVE ALL CORNERSTONES, IRON PINS, CONCRETE MONUMENTS, OR ANY OTHER TYPE OF LAND MONUMENT. THE CONTRACTOR SHALL HAVE ALL MONUMENTS IN THE PROXIMITY OF THE WORK REFERENCED. THE CONTRACTOR SHALL REPLACE DESTROYED OR DISTURBED LAND MONUMENTS AND SHALL FURNISH A CERTIFICATION BY A REGISTERED SURVEYOR THAT THE MONUMENTS HAVE BEEN RESTORED.

DISPOSAL OF EXCESS MATERIAL:

1. THE CONTRACTOR SHALL BE RESPONSIBLE FOR SECURING A SITE FOR DISPOSAL OF ALL EXCAVATED MATERIAL THAT IS UNSUITABLE FOR USE AS BACKFILL AND ALL OTHER EXCAVATED MATERIALS. THE CONTRACTOR SHALL PROVIDE THE ENGINEER WITH THE LOCATION OF THE DISPOSAL SITE AND WRITTEN PERMISSION FOR USE OF THE SITE FROM THE PROPERTY OWNER. THE COST FOR SECURING AND MAINTAINING THE DISPOSAL SITE SHALL BE INCLUDED IN THE UNIT PRICES STIPULATED FOR THE VARIOUS ITEMS IN THE BID PROPOSAL.

PROPERTY LINES:

1. PROPERTY LINES AND EXISTING UTILITY EASEMENTS ARE SHOWN FOR GENERAL LOCATION ONLY AND ARE BASED ON TAX MAP LOCATION. INDIVIDUAL PROPERTY SURVEYS TO LOCATE PROPERTY LINES HAVE NOT BEEN COMPLETED FOR THIS PROJECT.

PROPERTY DAMAGE:

1. THE CONTRACTOR SHALL BE RESPONSIBLE FOR DAMAGES TO EXISTING STRUCTURES, SUBGRADE PIPING, UTILITY CONNECTIONS, OR PROPERTY, AND SHALL REPAIR OR REPLACE ALL DAMAGES AT HIS OWN EXPENSE.

PAVEMENT REMOVAL:

1. ALL EXISTING ASPHALT AND CONCRETE PAVEMENT CUTTING, IF NECESSARY, SHALL BE MACHINE SAW CUT IN A NEAT AND STRAIGHT LINE. ASPHALT ROADWAY REPLACEMENT SHALL CONFORM TO THE STANDARD DETAIL.

INSTALLATION NOTES:

1. ALL PIPE LENGTHS AND SLOPES ON GRAVITY LINE SECTIONS ARE MEASURED FROM CENTER-OF-MANHOLE TO CENTER-OF-MANHOLE UNLESS OTHERWISE NOTED.

2. GRANULAR BEDDING SHALL BE USED PER SPECIFICATIONS AND AS DIRECTED BY THE ENGINEER.

3. PIPE SHALL BE INSTALLED AT A UNIFORM SLOPE AND MEET ALL GRADES AND ELEVATIONS AS ESTABLISHED ON THESE PLANS.

DISTURBED PROPERTY:

1. ALL DISTURBED PROPERTY SHALL BE RESTORED TO THE PRE-CONSTRUCTION CONDITION OR BETTER WITHIN 20 DAYS OF DISTURBANCE.

COSTS OF THE TESTING:

1. THE CONTRACTOR SHALL BE RESPONSIBLE FOR THE COST OF ALL TESTING.

VERTICAL SEPARATION:

1. AN EIGHTEEN INCH (18") MINIMUM VERTICAL SEPARATION (OUT-TO-OUT, CLEAR) SHALL BE MAINTAINED BETWEEN STORM SEWERS, SANITARY SEWERS, AND WATERLINES. IF VERTICAL SEPARATIONS CANNOT BE MET, THE CONTRACTOR SHALL NOTIFY THE ENGINEER IMMEDIATELY OF SUCH CONFLICT.

DUST CONTROL:

1. THE CONTRACTOR SHALL SUPPLY ALL NECESSARY LABOR, MATERIALS, AND EQUIPMENT SUCH AS CALCIUM CHLORIDE (IF NEEDED), WATER, OR A MOTORIZED DUST-FREE STREET SWEEPING DEVICE, AS APPROVED BY THE ENGINEER, TO MINIMIZE DUST GENERATED ON THE CONSTRUCTION SITE AND TO MAINTAIN ALL ROADWAYS BEING USED FOR ACCESS TO THE CONSTRUCTION SITE.

EARTHWORK OPERATIONS:

1. ALL STUMPS, TREES, UNSUITABLE EXCAVATED MATERIAL, AND OTHER CONSTRUCTION DEBRIS SHALL BE DISPOSED OF BY THE CONTRACTOR, AND INCLUDED IN THE BID PRICE.

2. A SUBSURFACE GEOTECHNICAL INVESTIGATION AND REPORT HAS NOT BEEN COMPLETED.THE CONTRACTOR IS STILL ENCOURAGED TO MAKE HIS OWN SUBSURFACE INVESTIGATION PRIOR TO CONSTRUCTION.

3. NO BACKFILLING OF ANY TRENCHES OR EXCAVATIONS WILL BE PERMITTED WITHOUT TAMPING EQUIPMENT BEING USED. FLOODING, JETTING OR PUDDLING OF BACKFILL WILL NOT BE PERMITTED.

4. SLAG PRODUCTS WILL NOT BE PERMITTED FOR USE AS PIPE BEDDING OR BACKFILL MATERIAL.

5. ALL EXCAVATION SHALL BE CONSIDERED UNCLASSIFIED. NO ADDITIONAL COMPENSATION SHALL BE PAID TO THE CONTRACTOR FOR ROCK OR SHALE EXCAVATION.

PROTECTION OF THE PUBLIC NOTES:

1. THE CONTRACTOR IS RESPONSIBLE FOR THE PROTECTION OF THE PUBLIC FROM ANY HAZARDS CAUSED BY THE CONSTRUCTION OF THIS PROJECT. THE CONTRACTOR SHALL PROVIDE SIGNS, BARRICADES, FENCING, PLATES, COVERS, ETC. NEEDED TO PROVIDE THIS PROTECTION. THE CONTRACTOR SHALL COMPLY WITH ALL FEDERAL, STATE, AND LOCAL LAWS AND REGULATIONS WITH RESPECT TO PROTECTING THE PUBLIC.

RESTORATION NOTES:

1. CONTRACTOR SHALL RESTORE ANY DISTURBED AREAS CAUSED FROM CONSTRUCTION TO PRE-CONSTRUCTION CONDITIONS OR BETTER. FOR DISTURBED LAWN AREAS, THE CONTRACTOR SHALL INSTALL COMPACTED, SCREENED, IMPORTED TOPSOIL TO PROVIDE A SMOOTH TRANSITION FROM THE ROAD SURFACE TO THE NON-PAVED SURFACE. SEE STANDARD DETAILS AND THE FOLLOWING NOTES FOR REQUIRED SEED MIX.

GRASS RESTORATION:

1. ALL GRASS AREAS ARE TO BE RESTORED UNLESS OTHERWISE SHOWN ON THE CONTRACT DRAWINGS.

SEEDING MIXTURE:

1. THE COMPOSITION OF SEED MIXTURE SHALL CONFORM TO THE PROJECT SPECIFICATIONS FOR SEEDING.

PAVEMENT MARKINGS:

1. CONTRACTOR IS RESPONSIBLE TO RESTORE ROADWAY PAVEMENT MARKINGS. ALL RESTORED PAVEMENT MARKINGS SHALL COMPLY WITH ODOT 644 FOR THERMOPLASTIC TYPE PRODUCTS.

EXISTING UTILITIES NOTES:

1. ALL EXISTING INVERT DEPTHS AND EXISTING UTILITY AND STRUCTURE LOCATIONS ARE APPROXIMATE AND HAVE BEEN BASED UPON RECORD DRAWINGS AND SITE SURVEY. THE ENGINEER DOES NOT GUARANTEE OR ASSURE THAT SUCH INFORMATION IS TRUE AND ACCURATE. THE CONTRACTOR SHALL VERIFY ALL LOCATIONS, SIZES, INVERTS, ETC. THE CONTRACTOR SHALL ADJUST THE WORK ACCORDINGLY TO PROVIDE THE REQUIRED SERVICE AND NOTIFY THE ENGINEER OF ANY SUCH CONFLICT.

2. THE LOCATIONS & ELEVATIONS OF ALL EXISTING UNDERGROUND UTILITIES & PROCESS LINES ARE SHOWN APPROXIMATELY IN THIS PLAN SET PRIOR TO THE NEW STORM INSTALL. THE CONTRACTOR IS RESPONSIBLE FOR INVESTIGATING THE LOCATION & ELEVATION OF THE EXISTING UTILITIES & PROCESS LINES THAT WILL BE AFFECTED BY DEMOLITION OR CONSTRUCTION OF BUILDINGS, STRUCTURES, & UNDERGROUND UTILITIES, ETC. THE CONTRACTOR SHALL PROMPTLY REPORT ANY CONFLICTS TO THE ENGINEER.

3. WHERE NEW PIPING IS SHOWN TO CONNECT TO EXISTING PIPING AND NO SPECIFIC CONNECTION DETAIL IS SHOWN, CONNECTION SHALL BE MADE WITH A NEW SECTION OF EQUAL DIAMETER CL 4 RCP AND THE JOINT SHALL BE CONCRETE ENCASED.

4. BEFORE ANY WORK IS STARTED THAT WILL INTERFERE WITH THE EXISTING UTILITIES, THE CONTRACTOR SHALL CALL THE "OHIO UTILITIES PROTECTION SERVICE", AT 1-800-362-2764, FORTY-EIGHT (48) HOURS IN ADVANCE OF THE WORK. NON-MEMBER UTILITIES MUST BE CONTACTED DIRECTLY. THE CONTRACTOR SHALL TAKE ALL NECESSARY PRECAUTIONS, AT NO ADDITIONAL EXPENSE TO THE OWNER, TO AVOID DAMAGE TO EXISTING UNDERGROUND AND OVERHEAD UTILITY LINES DURING THE ENTIRE PROJECTS. IN THE EVENT OF DAMAGE TO EXISTING PUBLIC AND/OR PRIVATE UTILITIES, THE AGENCY CONCERNED SHALL BE NOTIFIED IMMEDIATELY AND ALL REPAIR WORK SHALL BE EXECUTED IN ACCORDANCE WITH THE SPECIFICATIONS OF THE RESPECTIVE AGENCY AT NO ADDITIONAL EXPENSE TO THE OWNER, INCLUDING ANY INSPECTION FEES OR MAINTENANCE CREWS.

5. ALL UTILITY LINES CROSSING THE NEW SEWER TRENCH, I.E. STORM SEWERS, STORM LATERALS, SANITARY SEWERS, SANITARY LATERALS, WATER MAINS, WATER SERVICE CONNECTIONS, GAS MAINS, GAS SERVICE CONNECTIONS, UNDERGROUND OBT CONDUITS, CABLE TV AND ELECTRIC LINES SHALL BE PROTECTED AND SUPPORTED WITH HARDWOOD PLANKS, OR REMOVED AND REPLACED, RECONNECTED AND SUPPORTED ACROSS THE ENTIRE WIDTH OF THE TRENCH. ANY REMOVAL OR REPLACEMENT SHALL BE COORDINATED WITH UTILITY OWNER, AND WORK SHALL BE PERFORMED UNDER DIRECT SUPERVISION OF SAID UTILITY OWNER.

6. WHERE EXISTING POWER OR TELEPHONE POLES ARE IN CLOSE PROXIMITY TO WORK, THE CONTRACTOR SHALL COORDINATE HIS WORK EFFORTS WITH THOSE OF THE UTILITY COMPANIES SUCH THAT THEIR EXISTING FACILITIES CAN BE MAINTAINED AND PROTECTED DURING THE TIME WORK IS GOING ON ADJACENT TO THE POLE.

7. THE COST FOR ANY REQUIRED PROTECTION OR RELOCATION OF EXISTING UTILITIES SHALL BE THE RESPONSIBILITY OF THE CONTRACTOR TO PERFORM AND PAY.

8. DELAYS TO THE CONTRACTOR AS A RESULT OF TIMING OF UTILITY RELOCATION OR PROTECTION SHALL NOT BE CONSIDERED COMPENSABLE DELAYS, AS IT SHALL BE THE CONTRACTOR'S RESPONSIBILITY TO COORDINATE HIS WORK IN CONFORMANCE TO THE UTILITY COMPANY'S SCHEDULE.

STORM SEWER SYSTEM NOTES:

1. CONTRACTOR SHALL FILL ALL VOIDS AT PIPE CONNECTIONS TO EXISTING & NEW CATCH BASINS INSIDE & OUTSIDE WITH NON-SHRINK GROUT. GROUT WATER-TIGHT AND FLUSH TO ALL INTERIOR WALLS.

2. CONTRACTOR SHALL REMOVE EXISTING SHRUBS AND/OR TREES (INCLUDING STUMP), RESTORE & RE-GRADE EXISTING LAWN TO PRE-CONSTRUCTION CONDITIONS OR BETTER, NEW GRADE SHALL BLEND INTO EXISTING GRADE. REFER TO PROJECT MANUAL FOR REQUIREMENTS.

3. CONTRACTOR SHALL RE-CONNECT ALL ENCOUNTERED FINGER DRAINS AND OTHER STORM SEWER DRAIN LINES TO THE NEW STORM SEWER, SEE "DRAIN PIPE CONNECTION DETAIL".

4. ALL EXISTING UTILITY LINE ELEVATIONS SHOWN ARE ESTIMATED (EXCEPT FOR THE SANITARY SEWER) AND MUST BE FIELD DETERMINED BY THE CONTRACTOR. CONFLICTS MUST BE RESOLVED BY THE CONTRACTOR AND THE UTILITY OWNER.

5. HDPE STORM SEWER SHALL CONFORM TO AASHTO M-252 AND M-294 BELL AND SPIGOT WITH ASTM F-477 SILT TIGHT JOINTS. ALL PIPE CONNECTIONS TO CATCH BASINS TO BE GROUTED TIGHTLY INTERIOR AND EXTERIOR WALLS.

6. RIM ELEVATIONS ARE APPROXIMATELY SET. FINAL RIM TO BE FLUSH WITH FINAL GRADE IN PAVED AREAS & 3" BELOW FINAL LAWN GRADE.

7. WHEN CONNECTING EXISTING STORM SEWER OR STORM DRAIN LINES TO A NEW STORM SEWER STRUCTURE, CONTRACTOR SHALL MAKE CONNECTION BY INSTALLING A MIN 5'-0" NEW STORM SEWER DRAIN LINE (MATCH EXISTING DIA. & TYPE) & A SILT TIGHT COUPLING OR CONCRETE ENCASED JOINT AS APPROVED BY THE ENGINEER. SEE "DRAIN PIPE CONNECTION DETAIL".

8. INSTALL SILT SACK IN ALL CATCH BASINS, REMOVE WHEN DISTURBED AREAS ARE STABILIZED.

9. CONTRACTOR SHALL MAKE ALL CONNECTIONS WITH RCP PIPE TO NEW & EXISTING CATCH BASINS VIA GROUTING ANNULAR OPENINGS OF ALL PIPE ENTRIES WITH NON-SHRINK GROUT WATER-TIGHT AND FLUSH TO ALL INTERIOR WALLS. ALL NEW RCP PIPE SHALL BE CLASS IV AND CONFORM TO ASTM C76.

10. EACH CATCH BASIN SHALL BE OF THE ODOT TYPE AS NOTED IN THESE PLANS AND CONSTRUCTED IN ACCORDANCE WITH THE ODOT 2013 CONSTRUCTION AND MATERIAL SPECIFICATIONS (OR MOST CURRENT VERSION).

11. ALL CATCH BASINS CALLED OUT ON THE PLANS TO BE OF THE ODOT CATCH BASIN NO. 3 TYPE (LOCATED IN THE ROADWAY, GUTTER, OR ANY OTHER LOCATIONS WITH THE POTENTIAL TO BEAR TRAFFIC) SHALL FOLLOW ODOT HYDRAULIC STANDARD DRAWING CB-2.1, UNLESS OTHERWISE NOTED.

12. ALL CATCH BASINS CALLED OUT ON THE PLANS TO BE OF THE ODOT CATCH BASIN NO. 3A TYPE (LOCATED IN THE ROADWAY, GUTTER, OR ANY OTHER LOCATIONS WITH THE POTENTIAL TO BEAR TRAFFIC) SHALL FOLLOW ODOT HYDRAULIC STANDARD DRAWING CB-2.2, UNLESS OTHERWISE NOTED.

13. ALL CATCH BASINS CALLED OUT ON THE PLANS TO BE OF THE ODOT CATCH BASIN NO. 6 TYPE (LOCATED IN THE ROADWAY, GUTTER, OR ANY OTHER LOCATIONS WITH THE POTENTIAL TO BEAR TRAFFIC) SHALL FOLLOW ODOT HYDRAULIC STANDARD DRAWING CB-2.3, UNLESS OTHERWISE NOTED.

14. ALL CATCH BASINS CALLED OUT ON THE PLANS TO BE OF THE ODOT CATCH BASIN NO. 2-2A TYPE (LOCATED IN LAWN OR OTHER NON-TRAFFIC BEARING AREAS) SHALL FOLLOW ODOT HYDRAULIC STANDARD DRAWING CB-1.1, UNLESS OTHERWISE NOTED.

15. ALL GRATES SHALL BE BICYCLE SAFE, UNLESS OTHERWISE NOTED.

16. NO PIPES SHALL ENTER ANY INLET BOX AT THE CORNERS.

17. EACH CATCH BASIN AND MANHOLE SHALL BE PRECAST AND INCLUDE A 6" SUMP BELOW THE LOWEST PIPE INVERT. ANY OTHER DEVIATIONS FROM THE ODOT STANDARDS SHALL BE APPROVED BY THE ENGINEER, UNLESS OTHERWISE NOTED IN THESE PLANS.

18. ALL SOLID FRAME STORM MANHOLE LIDS SHALL BE EAST JORDAN IRON WORKS 1450 TYPE A SOLID RIBBED COVER "STORM SEWER" OR APPROVED SUBSTITUTE, UNLESS OTHERWISE NOTED.

19. ALL GRATED FRAME STORM MANHOLE LIDS SHALL BE EAST JORDAN IRON WORKS 1450 TYPE M FLAT GRATE COVER OR APPROVED SUBSTITUTE, UNLESS OTHERWISE NOTED.

TRAFFIC MAINTENANCE NOTES:

1. MAINTAINING TRAFFIC/TRAFFIC CONTROL SHALL BE IN ACCORDANCE WITH ODOT ITEM 614 "THE OHIO MANUAL OF UNIFORM TRAFFIC CONTROL DEVICES". AS A MINIMUM THE CONTRACTOR SHALL SUBMIT A CONTROL PLAN FOR REVIEW AND ACCEPTANCE BY THE ENGINEER PRIOR TO BEGINNING WORK.

2. IT WILL BE THE RESPONSIBILITY OF THE CONTRACTOR TO MAINTAIN SAFE LOCAL ACCESS, VEHICULAR AND PEDESTRIAN, TO ALL PROPERTIES WITHIN THE PROJECT LIMITS. THE CONTRACTOR WILL FURNISH, MAINTAIN AND SUBSEQUENTLY REMOVE ALL NECESSARY SAFEGUARDS SUCH AS BARRICADES, BARRIERS, TEMPORARY PAVEMENT, LIGHTING, FLAGGERS, SIGNING AND OTHER TRAFFIC CONTROLS TO INSURE THE SAFETY OF PERSONS AND VEHICLES DURING CONSTRUCTION WITHIN THE PROJECT LIMITS.

3. THE CONTRACTOR SHALL FURNISH AND INSTALL TRAFFIC COMPACTED SURFACE WITH ODOT 304 INCLUDING NECESSARY WATER AND CALCIUM CHLORIDE (IF NEEDED) FOR DUST CONTROL. THE COST FOR MAINTAINING TRAFFIC, TRAFFIC COMPACTED SURFACE AND DUST CONTROL SHALL BE INCLUDED IN THE UNIT PRICES STIPULATED FOR THE VARIOUS ITEMS IN THE BID PROPOSAL.

4. THE CONTRACTOR SHALL POST 5 M.P.H. SPEED LIMIT SIGNS IN ALL WORK ZONES AND AS DIRECTED BY THE ENGINEER.

5. ACCESS MUST BE MAINTAINED FOR RESIDENCES, EMERGENCY VEHICLES AND PEDESTRIANS INCLUDING PERSONS WITH DISABILITIES, AT ALL TIMES.

6. AT ALL EXCAVATION LOCATIONS THE CONTRACTOR SHALL PROVIDE SUITABLE FLASHERS, BARRICADES, AND TRAFFIC CONTROL DEVICES AS DEEMED NECESSARY BY THE ENGINEER AND IN ACCORDANCE WITH THE "MANUAL ON UNIFORM TRAFFIC CONTROL DEVICES" (MUTCD). SUCH TIME AS THE AREA IS COMPLETELY BACKFILLED.

7. NO DRIVEWAY SHALL BE BLOCKED BY THE CONTRACTOR OR SUBCONTRACTOR WITHOUT A WRITTEN NOTICE PROVIDED TO THE RESIDENT AT LEAST 24 HOURS IN ADVANCE OF THE BLOCKING.

STATE OF OHIO
CHRISTOPHER MICHAEL KOGELNIK
E-70064
REGISTERED
PROFESSIONAL ENGINEER

CT consultants
engineers • architects • planners
A Verdantas Company

NO	REVISION	DATE

SCALE: AS SHOWN
DATE: 08/01/2023
DESIGNED BY: CMK
DRAWN BY: AMM
CHECKED BY: CMK

VILLAGE OF LOWELLVILLE
YOUNGSTOWN-LOWELLVILLE RD. STORM SEWER IMPROVEMENTS
VILLAGE OF LOWELLVILLE, OHIO

GENERAL NOTES

PROJECT NO: 220549
DRAWING NAME: GN
SHEET 02 OF 14

GENERAL SYMBOLOGY NOTES:

1. THIS IS A STANDARD SHEET SHOWING THE COMMONLY USED SYMBOLOGY. ALL SYMBOLS ARE NOT NECESSARILY USED ON THIS PROJECT.
2. SCREENING OR SHADING OF WORK IS USED TO INDICATE EXISTING COMPONENTS OR TO DE-EMPHASIZE NEW IMPROVEMENTS TO HIGHLIGHT SELECTED TRADE WORK. REFER TO CONTEXT OF EACH SHEET FOR USAGE.
3. SYMBOLOGY OR DIAGRAMMATICAL LEGENDS MAY BE SHOWN ON INDIVIDUAL SHEETS FOR SCHEDULES, DIAGRAMS, DETAILS, SCHEMATICS, OR EQUIPMENT.

SITE PLAN SYMBOLOGY:

EXISTING STORM STRUCTURE
EXISTING STORM LINE
EXISTING WATER LINE — WAT
EXISTING OVERHEAD ELECTRIC — ELEC-OH — ELEC-OH
EXISTING GAS LINE — GAS
EXISTING CHAIN FENCE
EXISTING GATE FENCE
EXISTING GUIDERAIL
EXISTING BUILDING OUTLINE
EXISTING WALL
EXISTING BRUSH LINE
EXISTING TREE LINE
EXISTING RIGHT-OF-WAY — EX. R/W
EXISTING PROPERTY LINE
EXISTING MAJOR CONTOURS — 895
EXISTING MINOR CONTOURS
EXISTING ASPHALT DRIVE
EXISTING CONCRETE PAVEMENT
EXISTING CONCRETE SIDEWALK
EXISTING EDGE OF PAVEMENT
EXISTING GRAVEL DRIVE
EXISTING PAVEMENT (ROAD)
EXISTING STREAM LINE
CONSTRUCTION BASELINE — 1+00
PROPOSED STORM SEWER <12" DIA — STM
PROPOSED STORM SEWER >12" DIA
PROPOSED CURB
PROPOSED CONTOUR MAJOR — 895
PROPOSED CONTOUR MINOR
INDICATES DEMOLITION
PERMANENT EASEMENT LINE
TEMPORARY EASEMENT LINE
PROPOSED GUIDERAIL
PROPOSED WATERLINE — WAT
PROPOSED CURB REPLACEMENT

EXISTING SYMBOLOGY

DESCRIPTION	SYMBOL
POWER POLE	
STORM CATCH BASIN	
SANITARY MANHOLE	S
STORM MANHOLE	D
WATER HYDRANT	
WATER VALVE	
POST, SIGN (GENERAL)	
VEGETATION, TREE (DECID)	
VEGETATION, TREE (EVRGRN)	
FLOW PATH AND DIRECTION	
IRON PIN	
CONTROL POINT	

PROPOSED SYMBOLOGY

DESCRIPTION	SYMBOL
STORM MANHOLE	OR
CATCH BASIN	OR
ASPHALT PAVEMENT	
CONCRETE PAVEMENT	

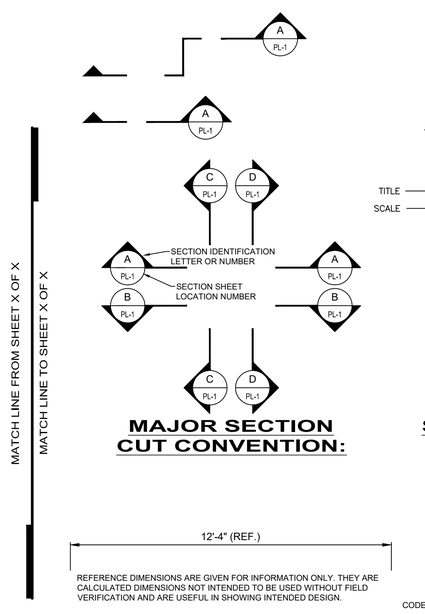

MAJOR SECTION CUT CONVENTION:

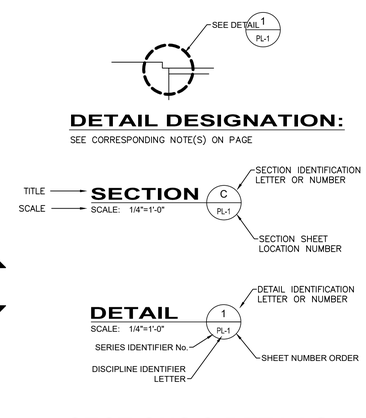

DETAIL DESIGNATION:

SEE CORRESPONDING NOTE(S) ON PAGE

SECTIONS & DETAILS CONVENTION:

REFERENCE DIMENSIONS ARE GIVEN FOR INFORMATION ONLY. THEY ARE CALCULATED DIMENSIONS NOT INTENDED TO BE USED WITHOUT FIELD VERIFICATION AND ARE USEFUL IN SHOWING INTENDED DESIGN.

REFERENCE DIMENSION:

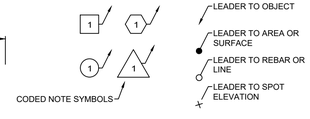

NOTE DESIGNATION:

SEE CORRESPONDING NOTE(S) ON PAGE

STATE OF OHIO
CHRISTOPHER MICHAEL KOGELNIK
E-70064
REGISTERED
PROFESSIONAL ENGINEER

CT consultants
engineers • architects • planners
A Verdantas Company

NO	REVISION	DATE

SCALE: AS SHOWN
DATE: 08/01/2023
DESIGNED BY: CMK
DRAWN BY: AMM
CHECKED BY: CMK

VILLAGE OF LOWELLVILLE
YOUNGSTOWN-LOWELLVILLE RD. STORM SEWER IMPROVEMENTS
VILLAGE OF LOWELLVILLE, OHIO

LEGENDS & SYMBOLOGY

PROJECT NO: 220549
DRAWING NAME: LS
SHEET 03 OF 14

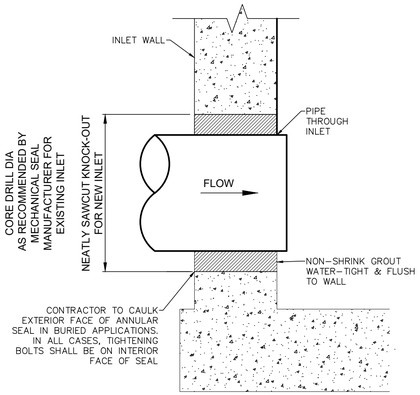

CROSS SECTION

ANNULAR SEAL FOR PIPE CONNECTION TO NEW & EXISTING INLETS DETAIL

NOT TO SCALE

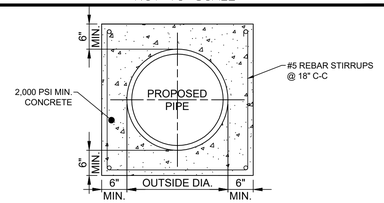

TYPICAL PIPE ENCASEMENT

NOT TO SCALE

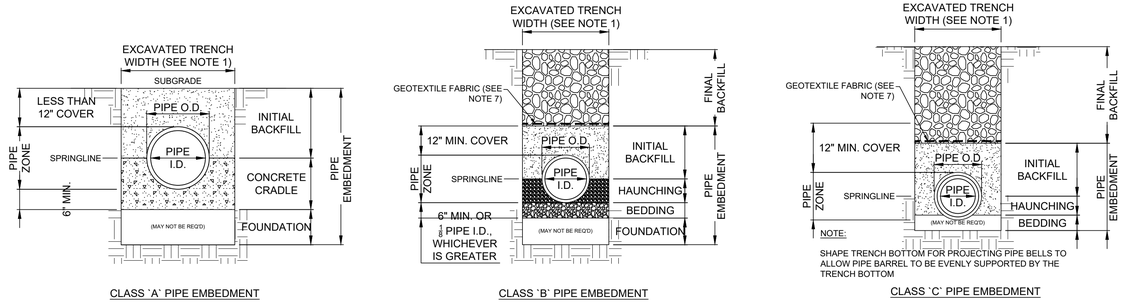

CLASS `A` PIPE EMBEDMENT

CLASS `B` PIPE EMBEDMENT

CLASS `C` PIPE EMBEDMENT

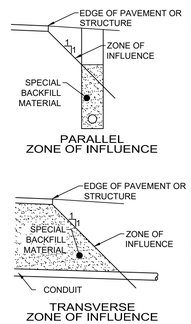

NOTES:

1. MAXIMUM EXCAVATED TRENCH WIDTH: THE MAXIMUM EXCAVATED TRENCH WIDTH FROM THE BOTTOM OF THE TRENCH TO 12" OVER THE TOP OF THE PIPE (WITHIN PIPE EMBEDMENT) SHALL BE O.D. + 6' FOR ALL PIPES.
2. FOUNDATION: WHERE AN UNSTABLE TRENCH BOTTOM CONDITION IS ENCOUNTERED, THE CONTRACTOR SHALL EXCAVATE TO A DEPTH REQUIRED BY THE ENGINEER AND REPLACE WITH MATERIAL AS DIRECTED BY THE ENGINEER.
3. PIPE EMBEDMENT:

   CLASS A: CLASS A PIPE EMBEDMENT SHALL BE USED FOR ALL PIPING UNDER PAVEMENT OR STRUCTURES WITH LESS THAN 12 INCHES OF PIPE COVER TO THE SUBGRADE. THE CONCRETE CRADLE SHALL BE IN ACCORDANCE WITH ODOT ITEM 499, CLASS "C". THE INITIAL BACKFILL SHALL BE AASHTO NO. 57 OR NO. 67 GRANULAR PIPE EMBEDMENT.

   CLASS B: CLASS B PIPE EMBEDMENT SHALL BE USED FOR ALL PIPING UNLESS OTHERWISE NOTED ON THE PLANS OR AUTHORIZED BY THE ENGINEER. THE BEDDING AND HAUNCHING SHALL BE AASHTO NO. 57 OR NO. 67 GRANULAR PIPE EMBEDMENT. IN ALL AREAS UNDER PAVEMENT, STRUCTURES OR WITHIN THE ZONE OF INFLUENCE, THE INITIAL BACKFILL SHALL BE AASHTO NO. 57 OR NO. 67 GRANULAR PIPE EMBEDMENT. IN ALL AREAS OUTSIDE OF PAVEMENT, STRUCTURES OR THE ZONE OF INFLUENCE, THE INITIAL BACKFILL SHALL BE SUITABLE ON-SITE MATERIAL APPROVED BY THE ENGINEER FOR ONLY REINFORCED CONCRETE PIPE AND DUCTILE IRON PIPE. THE INITIAL BACKFILL FOR ALL OTHER PIPES SHALL BE AASHTO NO. 57 OR NO. 67 GRANULAR PIPE EMBEDMENT.

   CLASS C: CLASS C PIPE EMBEDMENT SHALL ONLY BE USED FOR DUCTILE IRON WATER MAIN, DUCTILE IRON FORCE MAINS OR AS AUTHORIZED BY THE ENGINEER. THE PIPE EMBEDMENT SHALL BE AASHTO NO. 57 OR NO. 67 GRANULAR PIPE EMBEDMENT IN ALL AREAS UNDER PAVEMENT, STRUCTURES OR WITHIN THE ZONE OF INFLUENCE. THE PIPE EMBEDMENT SHALL BE SUITABLE ON-SITE MATERIAL APPROVED BY THE ENGINEER IN ALL AREAS OUTSIDE OF PAVEMENT, STRUCTURES OR THE ZONE OF INFLUENCE. WHERE ROCK OR SHALE IS ENCOUNTERED, A MINIMUM 6-INCHES OF AASHTO NO. 57 OR NO. 67 GRANULAR PIPE BEDDING OR SAND BEDDING SHALL BE PLACED AS DIRECTED BY THE ENGINEER.
4. FINAL BACKFILL: IN ALL AREAS UNDER PAVEMENT, STRUCTURES OR WITHIN THE ZONE OF INFLUENCE THE FINAL BACKFILL SHALL BE SPECIAL BACKFILL MATERIAL. IN ALL AREAS OUTSIDE OF PAVEMENT, STRUCTURES OR THE ZONE OF INFLUENCE, THE FINAL BACKFILL SHALL BE SUITABLE ON-SITE MATERIAL APPROVED BY THE ENGINEER.
5. SPECIFICATIONS: ALL TRENCHING, PIPE EMBEDMENT AND BACKFILL MATERIALS SHALL BE IN ACCORDANCE WITH SPECIFICATION 02300CT - EARTHWORK.
6. CLAY TRENCH DAMS: CLAY TRENCH DAMS SHALL BE REQUIRED FOR EACH LATERAL, UPSTREAM OF EVERY MANHOLE, AS SHOWN ON THE DRAWINGS, AND AS DIRECTED BY THE ENGINEER.
7. GEOTEXTILE FABRIC: INSTALL A GEOTEXTILE FABRIC IN ACCORDANCE WITH ODOT 712.09, TYPE A, AFTER ALL INITIAL BACKFILL CONSISTING OF AASHTO NO. 57 OR NO. 67 GRANULAR PIPE EMBEDMENT.
8. DETECTOR TAPE: IF REQUIRED IN THE SPECIFICATIONS, INSTALL DETECTABLE WARNING TAPE ABOVE UTILITIES, 12" BELOW FINISHED GRADE, EXCEPT 6" BELOW SUBGRADE UNDER PAVEMENT AND SLABS.

TRENCHING, EMBEDMENT, AND BACKFILL DETAIL

NOT TO SCALE

NOTES:

1. TIE-IN NEW CURBING TO EXISTING DRIVEWAY DEPRESSED CURB BY NEATLY SAWCUTTING AND REMOVING THE EXISTING CURB AS ILLUSTRATED, UNLESS OTHERWISE NOTED IN THE PLANS.
2. IF DRIVEWAY IS DAMAGED OR AFFECTED BY CONSTRUCTION, THE CONTRACTOR SHALL REPLACE THE DRIVEWAY APRON FOR THE ENTIRE WIDTH UP TO THE NEAREST CONSTRUCTION JOINT BY NEATLY SAWCUTTING AT THE JOINT AND FORMING UP TO THE EXISTING APRON WITH EXPANSION JOINT MATERIAL INSTALLED AT INTERFACES BETWEEN EXISTING AND NEW MATERIAL.
3. EXISTING SUBBASE MATERIAL (IF ANY) SHALL BE REPLACED, AS DIRECTED BY ENGINEER OR VILLAGE OFFICIALS.
4. USE EXPANSION JOINTS AS PER TYPICAL CONSTRUCTION JOINTS DETAIL.
5. NEW DRIVEWAYS SHALL BE DOWELED INTO EXISTING CONCRETE DRIVEWAYS AS PER SIDEWALK CONNECTION DETAIL, WHERE APPLICABLE.

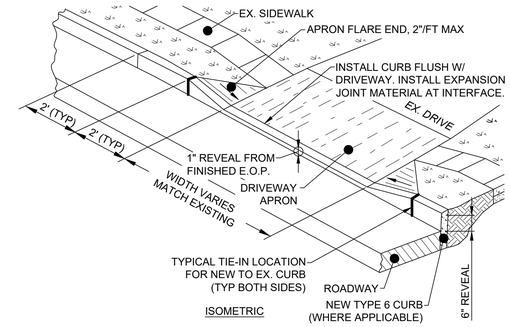

ISOMETRIC

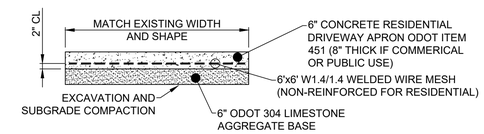

DRIVEWAY APRON SECTION

DEPRESSED CURB & DRIVEWAY APRON DETAIL

NOT TO SCALE

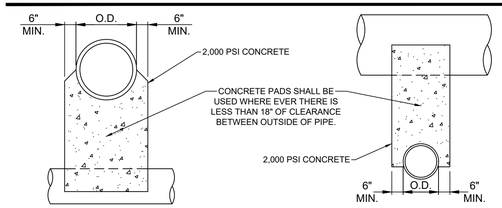

FRONT SECTION

SIDE SECTION

NOTE:

UNLESS OTHERWISE DIRECTED BY THE ENGINEER, WHERE TWO PIPES (SEWER & WATER) CROSS EACH OTHER, A CONCRETE PAD AND CRADLE SEPARATOR SHALL BE PLACED BETWEEN THEM AS INDICATED ABOVE. WHERE PERMISSION IS GRANTED TO OMIT THE CONCRETE PADS, GRANULAR BACKFILL SHALL BE TAMPED IN 6" LAYERS AROUND BOTH PIPES. SUCH TAMPED BACKFILL SHALL BE CONTINUOUS FROM THE CRADLE OF THE LOWER PIPE TO THE TOP OF THE UPPER PIPE AND AT THE BOTTOM SHALL EXTEND IN BOTH DIRECTIONS, FOR THE FULL WIDTH OF THE TRENCH.

PIPE CROSSING DETAIL

NOT TO SCALE

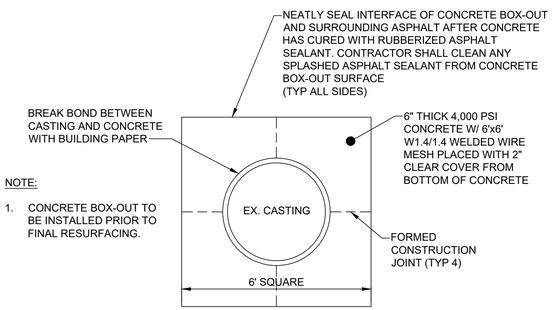

NOTE:

1. CONCRETE BOX-OUT TO BE INSTALLED PRIOR TO FINAL RESURFACING.

CONCRETE BOX-OUT DETAIL

NOT TO SCALE

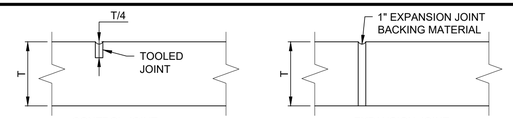

CONTROL JOINT

EXPANSION JOINT

CONTROL JOINT NOTES:

1. CONTROL JOINTS SHALL BE TOOLED, SAWCUTTING NEW CONCRETE IS NOT PERMITTED.
2. CONTROL JOINT SPACING SHALL EQUAL NEW SIDEWALK WIDTH, ADD ADDITIONAL DIAGONAL JOINTS AS NECESSARY TO CONTROL CRACKING AT ANGLES, BUILDINGS OR STRUCTURES.

EXPANSION JOINT NOTES:

1. EXPANSION JOINTS WITH EXPANSION JOINT MATERIAL SHALL BE INSTALLED AT INTERFACES OF DIFFERENT POURS.
2. EXPANSION JOINTS ARE TO BE INSTALLED ON ALL JOINTS BETWEEN NEW CONCRETE SECTIONS AND; EXISTING SIDEWALK SECTIONS, EXISTING CONCRETE PAVEMENT, NEW OR EXISTING CURBING OR APRONS, AND ANY OTHER STRUCTURAL FEATURES (I.E. UTILITY KNOCKOUTS, BUILDINGS, ETC.).

TYPICAL CONSTRUCTION JOINTS

NOT TO SCALE

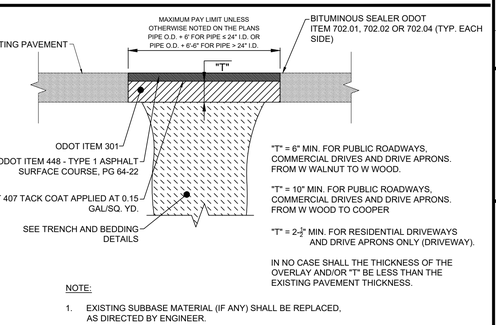

NOTE:

1. EXISTING SUBBASE MATERIAL (IF ANY) SHALL BE REPLACED, AS DIRECTED BY ENGINEER.

TYPE C PAVEMENT REPLACEMENT

NOT TO SCALE

NOTES:

1. ALL EXISTING LAWN AREAS DISTURBED SHALL BE RESTORED TO MATCH THE EXISTING CONDITIONS BY FILLING ANY DISTURBED AREAS WITH SCREENED, IMPORTED TOPSOIL TO BE FLUSH WITH THE EXISTING AND/OR PROPOSED CURB AND SIDEWALK. ALL DISTURBED AREAS SHALL BE SEEDED AND MULCHED IN ACCORDANCE WITH THE SPECIFICATIONS.
2. LAWN AREAS BETWEEN NEW OR EXISTING SIDEWALK BEHIND NEW CURB SHALL BE QUANTIFIED AND INCLUDED WITHIN THE BID ITEM COST FOR THE NEW CURB. ALL OTHER LAWN AREA RESTORATION AND LAWN AREAS BEHIND NEW SIDEWALK SHALL BE INCLUDED IN THE BID ITEM COST FOR SEEDING AND MULCHING.
3. THE CONTRACTOR SHALL INSTALL EXPANSION JOINT FILLER BETWEEN EXISTING SIDEWALK TO REMAIN IN PLACE AND NEW SIDEWALK INSTALLED AS PART OF THE PROJECT (PER ODOT 608.03). EXPANSION JOINT MATERIAL SHALL BE INSTALLED BETWEEN EXISTING RIGID DRIVEWAYS AND NEW SIDEWALK.
4. NEW CONCRETE WALK SHALL TIE-IN AND MATCH THE EXISTING ELEVATION OF EXISTING SIDEWALK, CURB RAMPS, DRIVEWAYS AND DRIVE APRONS, ETC. NEWLY INSTALLED WALK NOT PROPERLY MATCHING ELEVATIONS AS DEEMED BY THE ENGINEER OR OWNER SHALL BE REMOVED AND REPLACED AT THE CONTRACTOR'S EXPENSE. NO ADDITIONAL PAYMENT WILL BE MADE FOR TIME OR MATERIAL.
5. SURFACE OF SUBBASE TO BE UNIFORM AND FREE OF ANY UNDULATIONS OR FOREIGN MATERIAL PRIOR TO INSTALLATION OF 4" CONCRETE SIDEWALK.
6. CONTRACTOR TO MAINTAIN POSITIVE DRAINAGE TO PREVENT PONDING WITHIN RIGHT-OF-WAY OR PRIVATE PROPERTY.

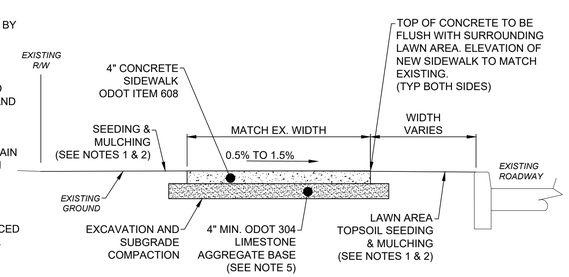

TYPICAL SIDEWALK REPLACEMENT SECTION

SIDEWALK REPLACEMENT DETAIL

NOT TO SCALE

NOTES:

1. EXISTING UNSUITABLE SUBBASE MATERIAL (IF ANY) SHALL BE REPLACED, AS DIRECTED BY ENGINEER OR VILLAGE OFFICIALS.
2. CONTRACTOR TO MAINTAIN EX. ROAD CROSS-SLOPE AND ELEVATION OF EDGE OF PAVEMENT.
3. LOW STRENGTH MORTAR MAY BE SUBSTITUTED WITH SAME CONCRETE AS CURB MIX, AS APPROVED BY THE ENGINEER.
4. SURFACE COURSE AND OTHER SURFACE IMPROVEMENT ITEMS SHALL BE INSTALLED WHEN PROJECT'S FINAL RESURFACING IS PERFORMED.

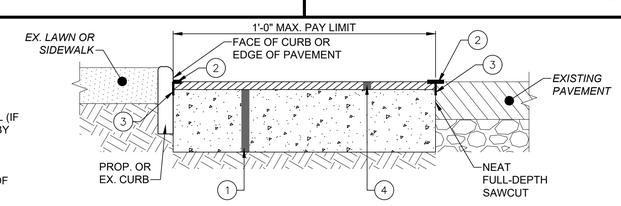

SECTION

CODED NOTES:

1. INSTALL 12" OF 8 SACK CONCRETE GROUT BETWEEN NEW CURB AND EXISTING PAVEMENT (SEE NOTE 3)
2. BITUMINOUS SEALER ODOT ITEM 702.01, 702.02 OR 702.04. (SEE NOTE 3)
3. ODOT 407 TACK COAT (TYP. ALL EXPOSED VERTICAL SURFACES)
4. 2" MIN. ODOT 448 - ASPHALT CONCRETE SURFACE COURSE, TYPE 1, PG64-22, AS PER PLAN (SEE NOTE 4)

FULL-DEPTH ROAD REPLACEMENT DETAIL IN FRONT OF NEW CURB

NOT TO SCALE

STATE OF OHIO
CHRISTOPHER MICHAEL KOGELNIK
E-70064
REGISTERED
PROFESSIONAL ENGINEER

CT consultants
engineers • architects • planners
A Verdantas Company

NO	REVISION	DATE

SCALE: AS SHOWN
DATE: 08/01/2023
DESIGNED BY: CMK
DRAWN BY: AMM
CHECKED BY: CMK

VILLAGE OF LOWELLVILLE
YOUNGSTOWN-LOWELLVILLE RD. STORM SEWER IMPROVEMENTS
VILLAGE OF LOWELLVILLE, OHIO

CONSTRUCTION DETAILS - 01

PROJECT NO: 220549
DRAWING NAME: CD-01
SHEET 04 OF 14

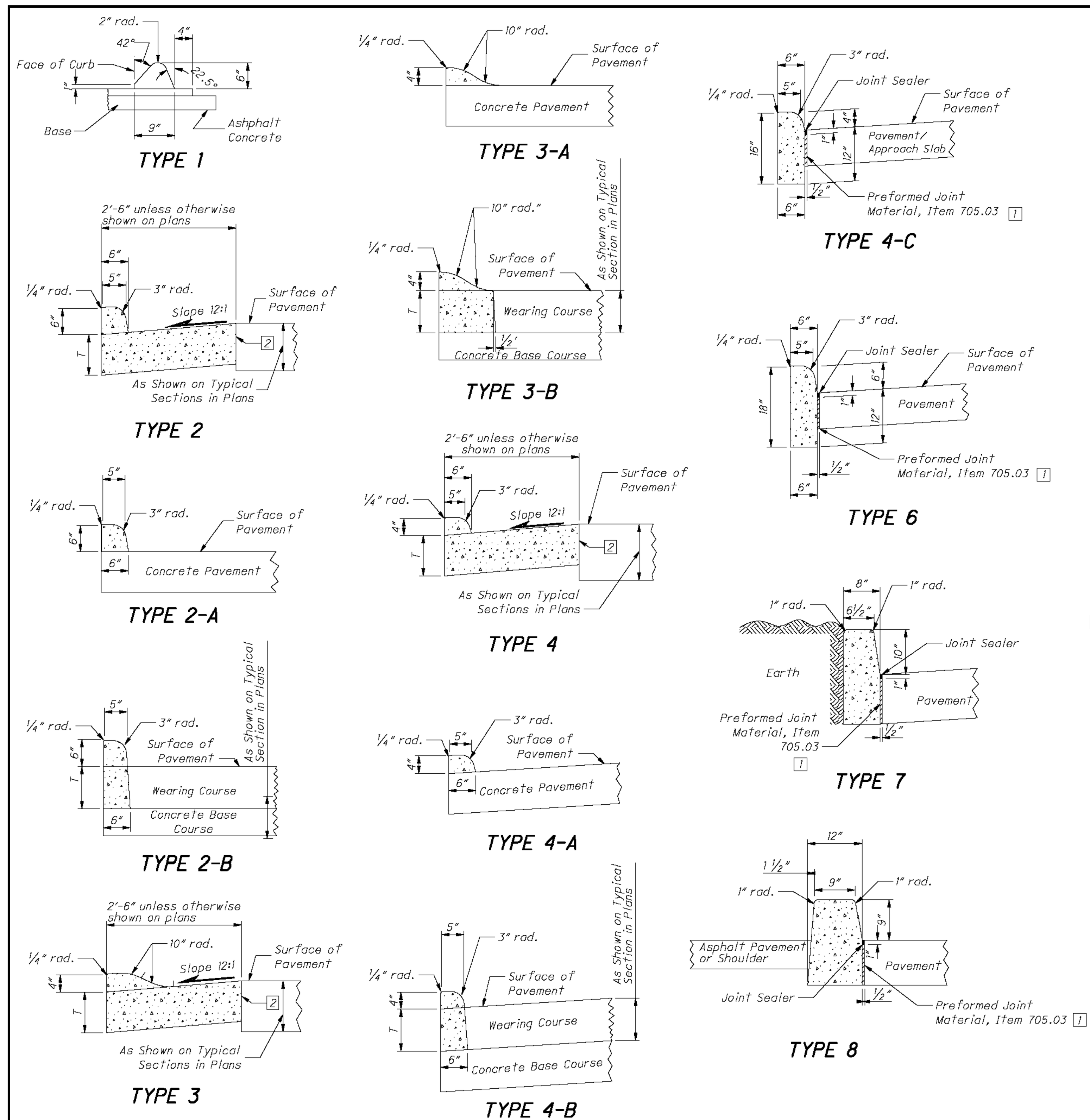

NOTES

GENERAL: This drawing shows alternate types of curb that may be used on various types of pavement. The typical section of the project shows the type to be used, also the thickness of the edge of the pavement or the edge of the curb and gutter section.

JOINTS: 1" expansion joints shall extend up to the top of the curb and shall be constructed in the curb and gutter section in such a manner that the joint seal will extend the full width of the gutter and into the curb face a sufficient distance to seal the joint to an elevation of a least 2" above the flow line of the gutter. Dowel bars shall be used in the curb and gutter section at expansion joints and to the surface of the pavement.

Transverse expansion joint material shall meet the requirements of Item 705.03.

GUTTER PLATE THICKNESS: Thickness of gutter plate "T" shall be 9" unless otherwise shown on the plans.

TOLERANCES: Dimensional tolerances are as follows:
Curbs: -1/32" to +1/4".
Gutters: 0 to +1/2".

LEGEND

[1] Expansion joint material and joint sealer are not required for the portion of the curb that is adjacent to a flexible pavement type. Both materials are required, as detailed, for the full height of rigid pavement and concrete bases.

[2] Butt joints shall be provided between combined curb-and-gutter and new or existing rigid pavements, with tie bars or hook bolts provided at intervals of 5'. See SCD BP-2.1 for details of tie bars and hook bolts.
If the combined curb-and-gutter adjoins a new rigid base or an existing rigid base or pavement that is to be surfaced with bituminous material, a butt joint shall also be provided. However, tie bars or hook bolts shall be omitted when the vertical overlap ("V" in detail below) between the curb-and-gutter and rigid pavement is less than 7".

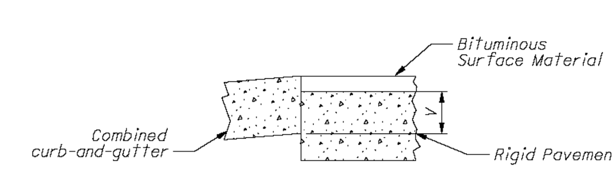

THIS DRAWING REPLACES BP-5.1 DATED 7-28-00.

STATE OF OHIO DEPARTMENT OF TRANSPORTATION — Michael Bline, ADMINISTRATOR — 7-19-2013 DATE
STDS. ENGINEER: M. Ruppe
OFFICE OF ROADWAY ENGINEERING
STANDARD ROADWAY CONSTRUCTION DRAWING: CONCRETE CURBS AND COMBINED CURB AND GUTTER
SCD NUMBER: BP-5.1
1/1

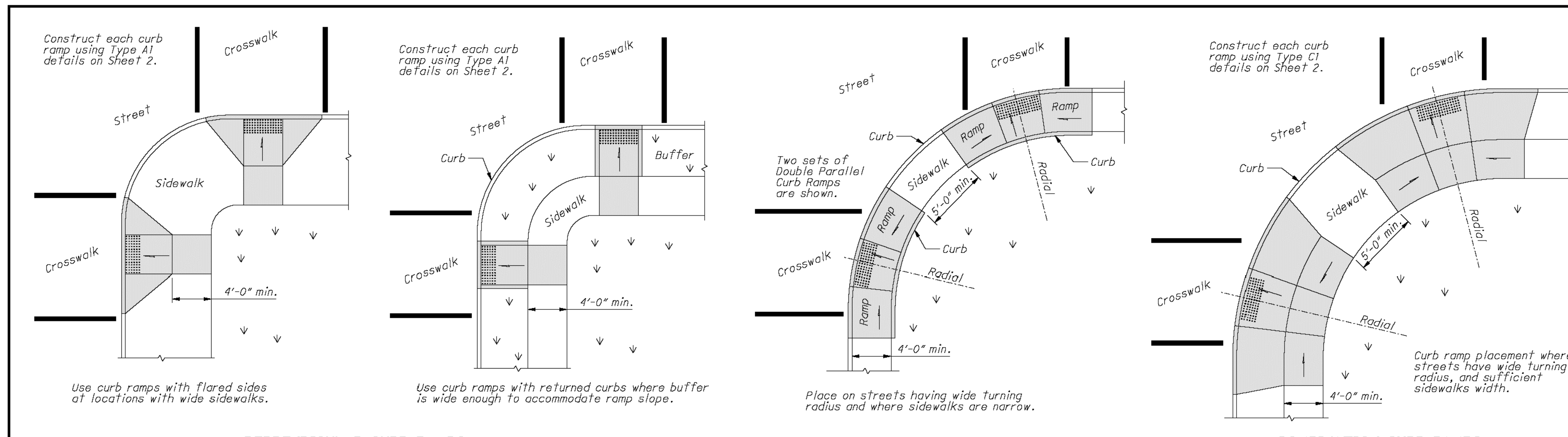

PERPENDICULAR CURB RAMPS

PARALLEL CURB RAMPS

COMBINATION CURB RAMPS

PREFERRED CONSTRUCTION PLACEMENT

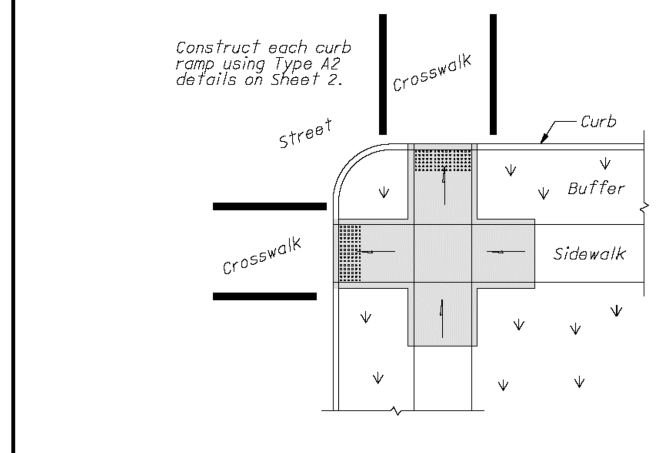

NOTES

GENERAL: This drawing shows curb ramp types details and placement examples for curb ramp construction, including the installation of detectable warnings.

Curb ramp types are shown on Sheet 2 and include Perpendicular, Parallel, and Combined types as specified to be constructed in the locations shown on the project plans.

Curb ramps added to an existing intersection or walk should be individually detailed on the project plans to assure that the design is appropriate for site constraints and all items can be constructed to ADA standards. The contractor may adjust the placement of curb ramps if existing field conditions warrant with the approval of the Engineer.

PAYMENT: Measure and pay for the ramp area within the shaded limits of this drawing as Item 608 Curb Ramp, Square Foot. This includes the cost of any curb or curb and gutter, detectable warnings, landing areas and any additional materials, installation, grading, forming, and finishing required within the shaded area.

Work beyond the shaded ramp/landing area is paid for as curb (609) and walk (608). Removal of existing curb, walk (or existing curb ramps) are paid under Item 202.

For at-grade crossing locations where only detectable warnings are required in order to acheive ADA compliance, measure and pay for the strip of detectable warnings as Item 608 Detectable Warning, Square Foot. The work to cast the tiles in place will also require removal of existing pavement (Item 202) to the nearest joint, or if no joint exists, a minimum of 4 feet.

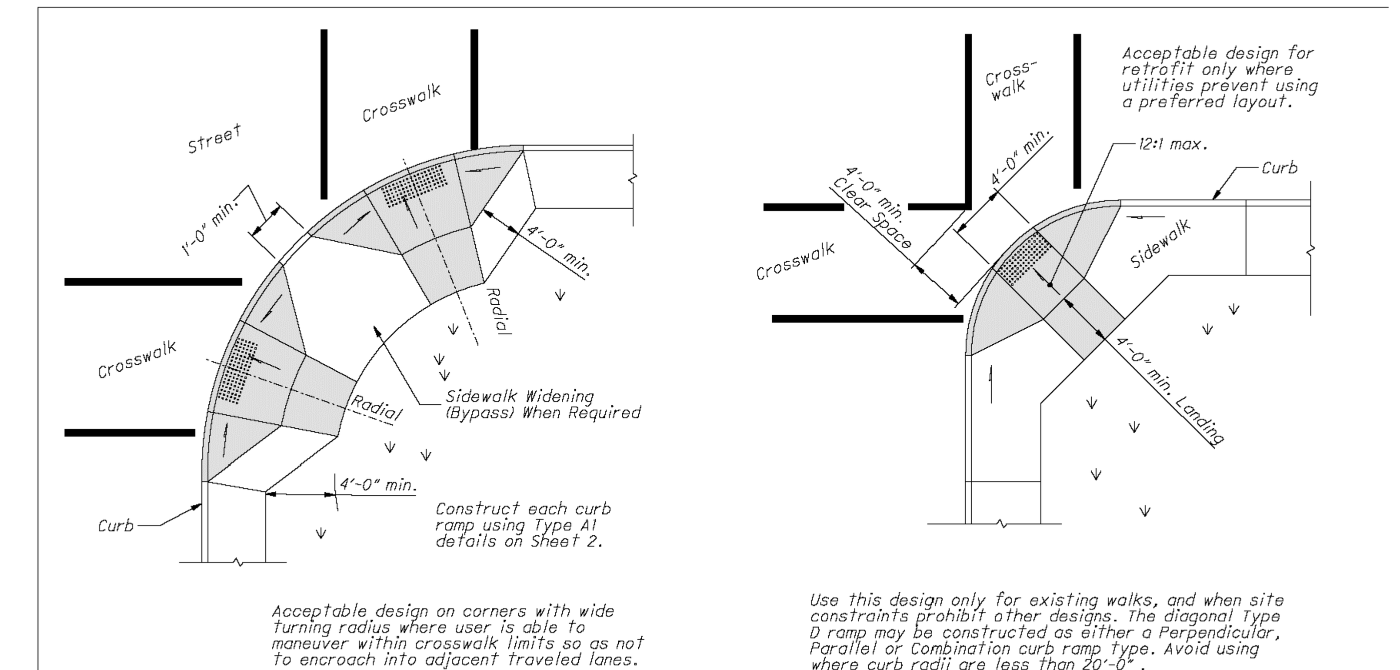

PERPENDICULAR RAMPS

DIAGONAL RAMP (Type D)

ACCEPTABLE CONSTRUCTION PLACEMENT

THIS DRAWING REPLACES BP-7.1 DATED 7-18-14.

STATE OF OHIO DEPARTMENT OF TRANSPORTATION ADMINISTRATOR: David L. Holstein — REVISION DATE 7-20-2018
STDS. ENGINEER: D. Fisher
OFFICE OF ROADWAY ENGINEERING
STANDARD ROADWAY CONSTRUCTION DRAWING: NEW CURB RAMPS (with Detectable Warnings)
SCD NUMBER: BP-7.1
1/3

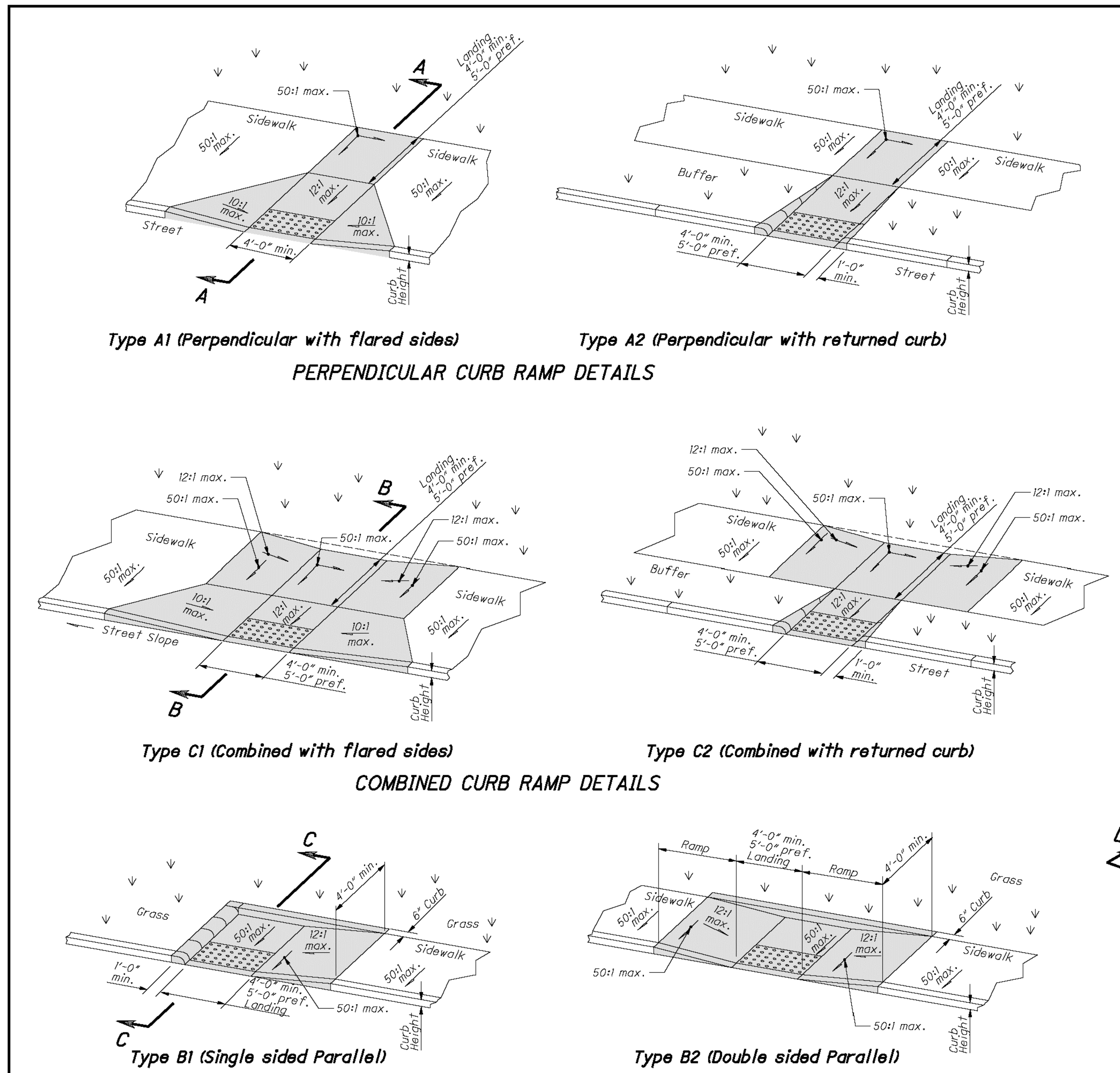

Type A1 (Perpendicular with flared sides)

Type A2 (Perpendicular with returned curb)

PERPENDICULAR CURB RAMP DETAILS

Type C1 (Combined with flared sides)

Type C2 (Combined with returned curb)

COMBINED CURB RAMP DETAILS

Type B1 (Single sided Parallel)

Type B2 (Double sided Parallel)

PARALLEL CURB RAMP DETAILS

NOTES CONTINUED

The running slope of the curb ramp shall be a 12:1 maximum or flatter. In existing sidewalks, where the maximum ramp slope is not feasible due to site constraints (e.g. utility poles or vaults, right-of-way limits) it may be reduced as follows:

A) 10:1 for a max. rise of 6",
B) 8:1 for a max. rise of 3",
C) 6:1 over a max. run of 2'-0" for historic areas where a flatter slope is not feasible.

To prevent chasing the grade indefinately, the transition from exisiting sidewalk to the shaded curb ramp area is not required to exceed 15 feet in length.

While ramps may be skewed to the crosswalk, the entire lower landing area must fall within the cross walk that the ramp serves and cannot be located in the traveled lane of opposing traffic.

The counter slope of the gutter or street at the foot of a curb ramp, landing, or blended transitions shall be 20:1 ot flatter.

The bottom edge of the ramp shall change planes perpendicular to the landing.

The edge of the curb shall be flush with the edge of the adjacent pavement and gutter and surface slopes that meet grade breaks shall also be flush.

Ramp landings shall be 4' min. x 4' min. with a 50:1 or flatter cross slope and running slope.

DETECTABLE WARNINGS: Install Detectable Warnings on each curb ramp with approved materials, as shown on Sheet 3. Install these proprietary products as per manufacturer's written instructions.

DRAINAGE: Contractor is to ensure the base of each constructed curb ramp allows for proper drainage, without exceeding allowable cross slope or ramp slopes. Vertical change in level exceeding 1/8" between the 1) pavement and gutter, and 2) gutter and ramp, are not allowed.

SURFACE TEXTURE: Texture concrete surfaces by coarse brooming transverse to the ramp slopes to be rougher than the adjacent walk.

JOINTS: Provide expansion joints in the curb ramp as extensions of walk joints and consistent with Item 608.03 requirements for a new concrete walk. Provide a 1/2" Item 705.03 expansion joint filler around the edge of ramps built in existing concrete walks. Lines shown on this drawing indicate the ramp edges and slope changes, and do not necessarily indicate joint lines.

See Sheet 3 for Sections.

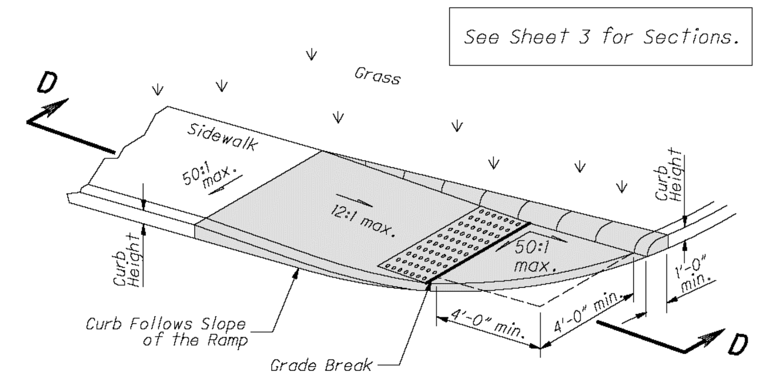

Type B3 (Single sided Parallel)

THIS DRAWING REPLACES BP-7.1 DATED 7-18-14.

STATE OF OHIO DEPARTMENT OF TRANSPORTATION ADMINISTRATOR: David L. Holstein — REVISION DATE 7-20-2018
STDS. ENGINEER: D. Fisher
OFFICE OF ROADWAY ENGINEERING
STANDARD ROADWAY CONSTRUCTION DRAWING: NEW CURB RAMPS (with Detectable Warnings)
SCD NUMBER: BP-7.1
2/3

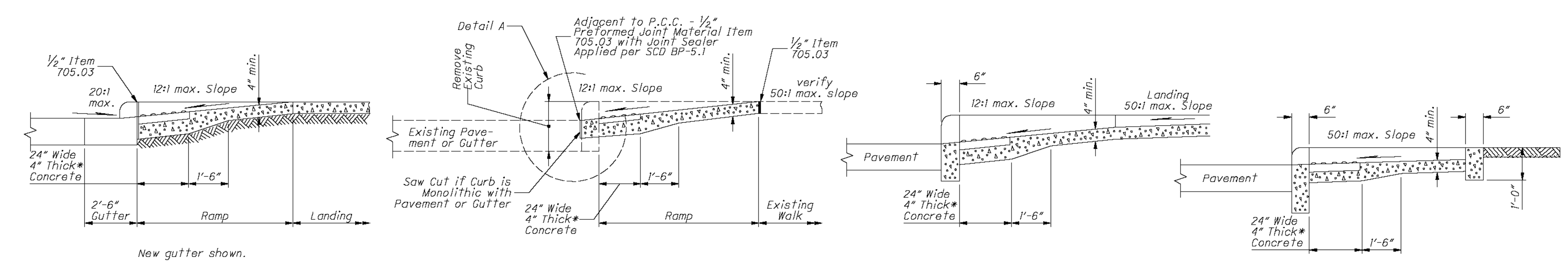

SECTION A-A
NORMAL DETAIL
See Sheet 2.

SECTION A-A
EXISTING WALK DETAIL
See Sheet 2.

SECTION B-B
See Sheet 2.

SECTION C-C
See Sheet 2.

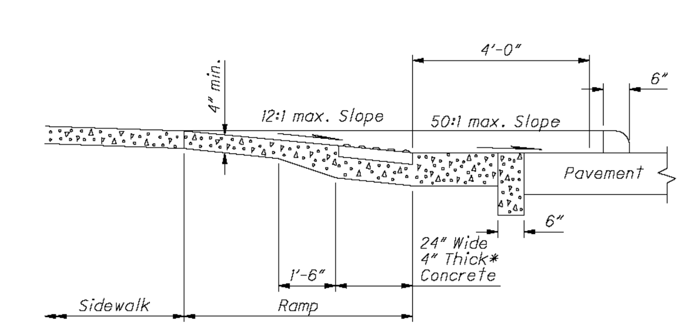

SECTION D-D
See Sheet 2.
*Where possible, pour ramp area integral with the curb, otherwise use 6" thick walk.

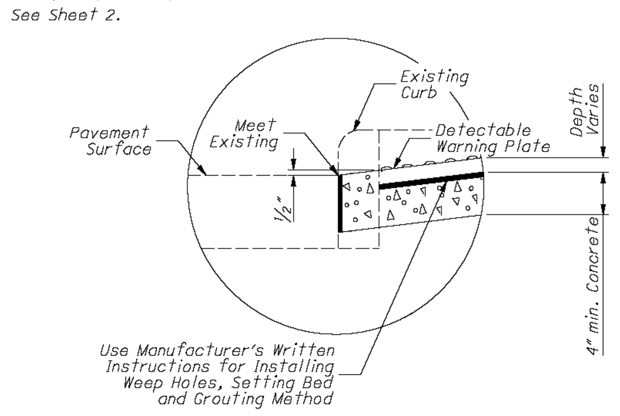

DETAIL A

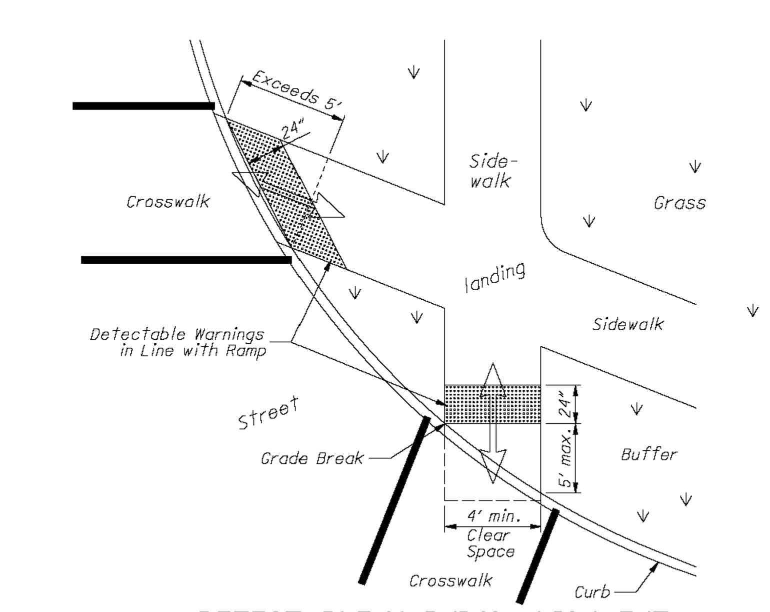

DETECTABLE WARNING ALIGNMENT

DETECTABLE WARNINGS NOTES

GENERAL: Detectable Warnings are a distinctive surface pattern of truncated domes which are detectable by cane or underfoot to alert people with vision impairments of their approach to streets and hazardous drop-offs.

PLACEMENT: Detectable warnings are to be installed at any location where pedestrians might cross paths with vehicular traffic lanes, such as the base of curb ramps or at blended curbs. A 24" strip of domes is to be installed for the full width of the ramp or walk. Typical street corner placement locations are shown on Sheet 1.

The depth of concrete underneath detectable warning products shall be a minimum of 4". See DETAIL A.

ALIGNMENT: Truncated domes should be aligned with the primary direction of the ramp as shown on the DETECTABLE WARNING ALIGNMENT Detail. Normally the detectable warnings should be flush with the back of the curb, but for skewed conditions see DETECTABLE WARNING ALIGNMENT Detail. For non-standard layouts, detectable warning materials may have to be mitered and placed segmentally.

PRODUCTS & COLORS: Color of the detectable warnings should contrast with surrounding concrete walk and ramp. Black is not an acceptable color. Approved products and guidance on color may be found on the Office of Roadway Engineering Service's Detectable Warnings Approved List. Install products as per manufacturer's printed instructions.

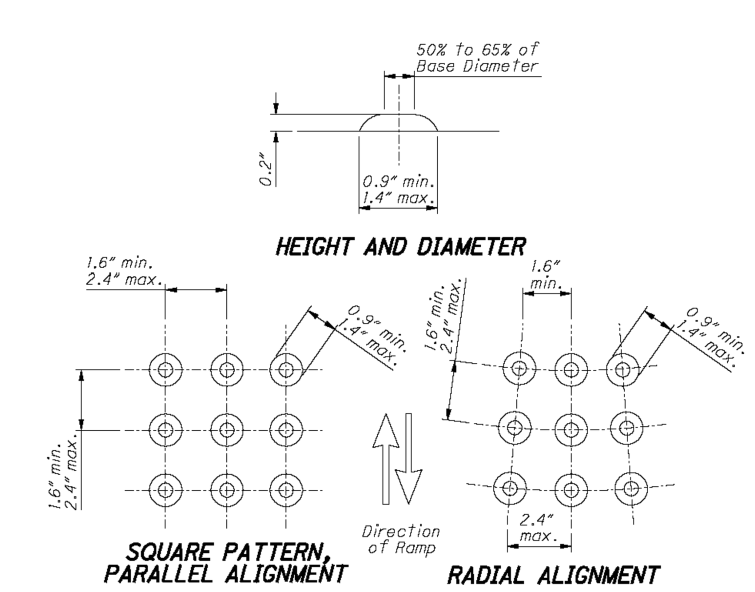

TRUNCATED DOMES DETAILS

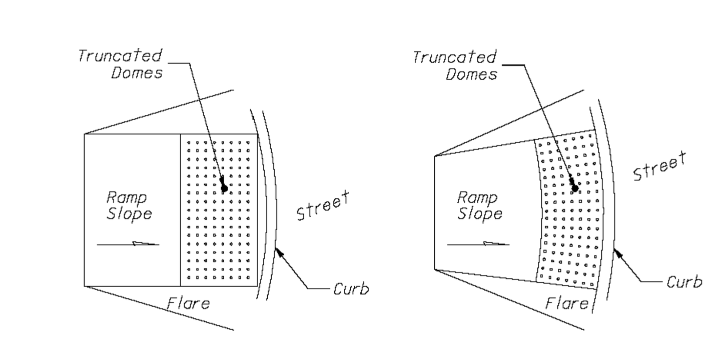

DOME ALIGNMENT ON RADIUSED CURB

THIS DRAWING REPLACES BP-7.1 DATED 7-18-14.

STATE OF OHIO DEPARTMENT OF TRANSPORTATION ADMINISTRATOR: David L. Holstein — REVISION DATE 7-20-2018
STDS. ENGINEER: D. Fisher
OFFICE OF ROADWAY ENGINEERING
STANDARD ROADWAY CONSTRUCTION DRAWING: NEW CURB RAMPS (with Detectable Warnings)
SCD NUMBER: BP-7.1
3/3

STATE OF OHIO — CHRISTOPHER MICHAEL KOGELNIK — E-70964 — REGISTERED PROFESSIONAL ENGINEER

CT consultants — engineers • architects • planners — A Verdantas Company

NO	REVISION	DATE
.		.
.		.
.		.
.		.
.		.
.		.
.		.

SCALE: AS SHOWN
DATE: 08/01/2023
DESIGNED BY: CMK
DRAWN BY: AMM
CHECKED BY: CMK

VILLAGE OF LOWELLVILLE
YOUNGSTOWN-LOWELLVILLE RD. STORM SEWER IMPROVEMENTS
VILLAGE OF LOWELLVILLE, OHIO

CONSTRUCTION DETAILS - 02

PROJECT NO: 220549
DRAWING NAME: CD-02
SHEET 05 OF 14

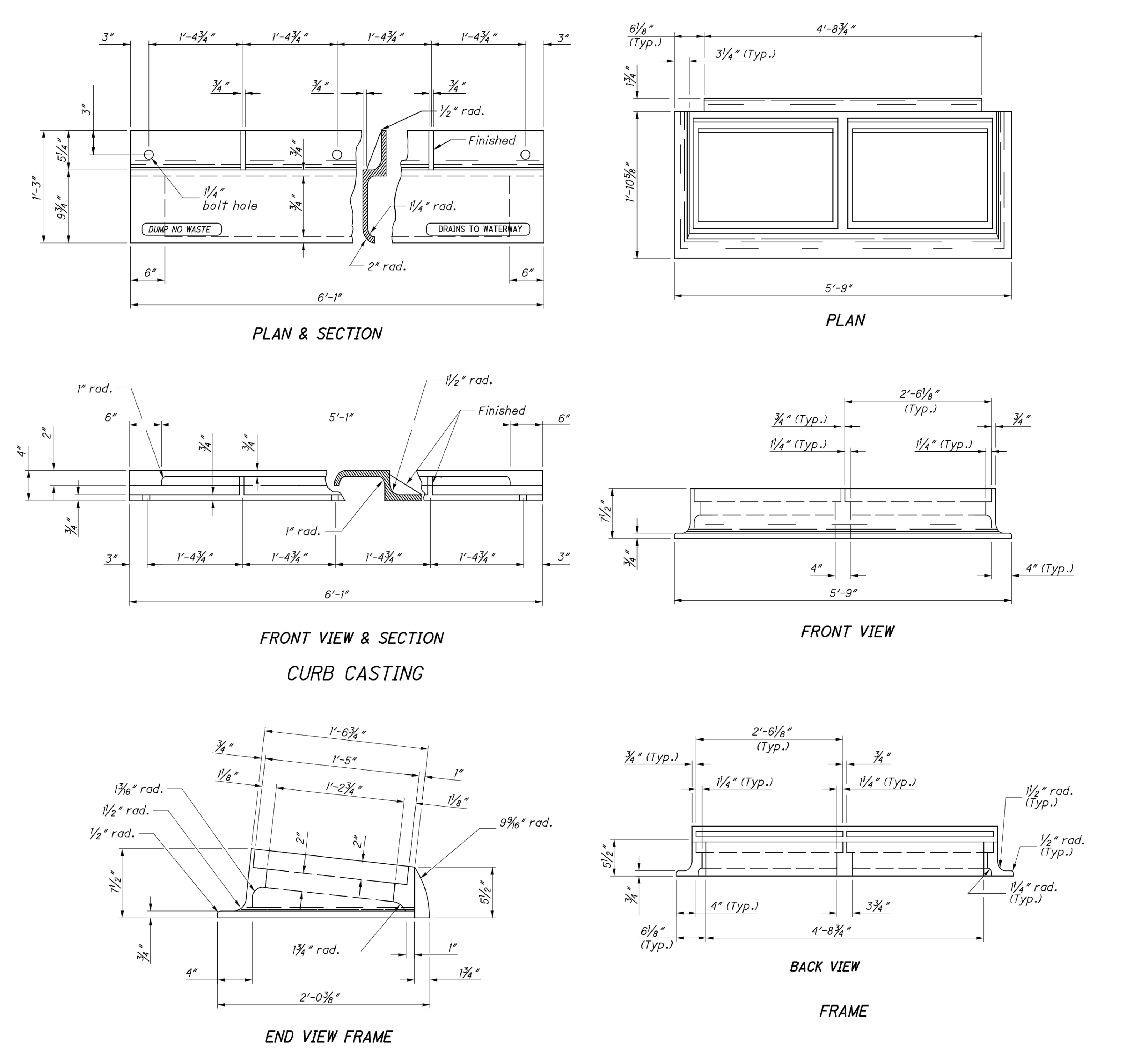

NOTES

GRATES: Two required. For details, see **SCD CB-3A.** Provide Grate "V" unless the plans specifically require the diagonal grate. If the diagonal grate is specified, place it so that the diagonal bars direct drainage flow toward the curb.

CASTINGS: Provide a design essentially the same and equally as strong as the one shown. Minimum weight:

Curb Casting . . . . . 305 lbs.
Two Grates . . . . . . 254 lbs.
Frame . . . . 590 lbs.
Two Grate "V" . . . . 210 lbs.

Lighter weight frames and grates that meet the requirements of CMS 711.14 may also be provided. Provide grate openings and dimensions as shown here unless otherwise shown in the plans.

Cast the following text into the top of the curb casting:

"DUMP NO WASTE" and **"DRAINS TO WATERWAY"**

Print text in bold, capital letters at least ¾" high. See example on Plan & Section. "WATERWAY" may be substituted with "STREAM", "RIVER", "LAKE", etc. Actual placement and logo may vary per manufacturer.

BEARING AREAS: Fit and finish the frame and grate to provide a firm and even seat. No projections are permitted on bearing areas, and the grate must seat in its frame without rocking.

WALLS: When used in place of concrete, construct brick side walls with 8" nominal thickness.

PRECAST CONSTRUCTION: Permitted, except for the apron. Meet CMS 706.13 concrete requirements. Provide precast walls at least 6" thick with sufficient reinforcing to permit shipping and placement without damage. Reduce the wall thickness from the outside.

MINIMUM DEPTH: The minimum depth is per the cover requirements for that pipe type.

OPENINGS: Ensure pipe openings are the O.D. of the pipe being supplied plus 2" when fabricated or field cut. Fill any voids per C&MS 611.

DOWELS: Furnish four 1"x18" dowels for concrete pavement or gutter blockout. See **SCD BP-2.2** for dowel details.

BLOCKOUT: Pave blockouts with 4000 psi compressive strength concrete in PCC pavement or gutter. Blockouts are paid for as part of the pavement or gutter with no deduction in pavement, curb or gutter quantities because of the castings. Cast a 4000 psi compressive strength concrete apron, the size of the 2'-0" gutter blockout, in place in asphalt pavement (no dowels required) with the cost included in the catch basin bid price. Provide the 1" expansion joint in the curb for all curb types with no deduction made in curb quantities.

PAYMENT: All materials and labor, including excavation and backfilling, are paid for under **Item 611 - Catch Basin, No. 3.**

STATE OF OHIO DEPARTMENT OF TRANSPORTATION HYDRAULIC ENGINEER — Jeffery E. Syar
REVISIONS: 7-15-05, 7-20-12, 1-18-13, 1-15-16, 7-20-18, 1-15-21, 7-16-21
ROADWAY HYDRAULIC ENGINEER — M. Cozzoli
OFFICE OF HYDRAULICS ENGINEERING
STANDARD HYDRAULIC CONSTRUCTION DRAWING — CATCH BASIN No. 3
DRAWING CB-3 — 2/2

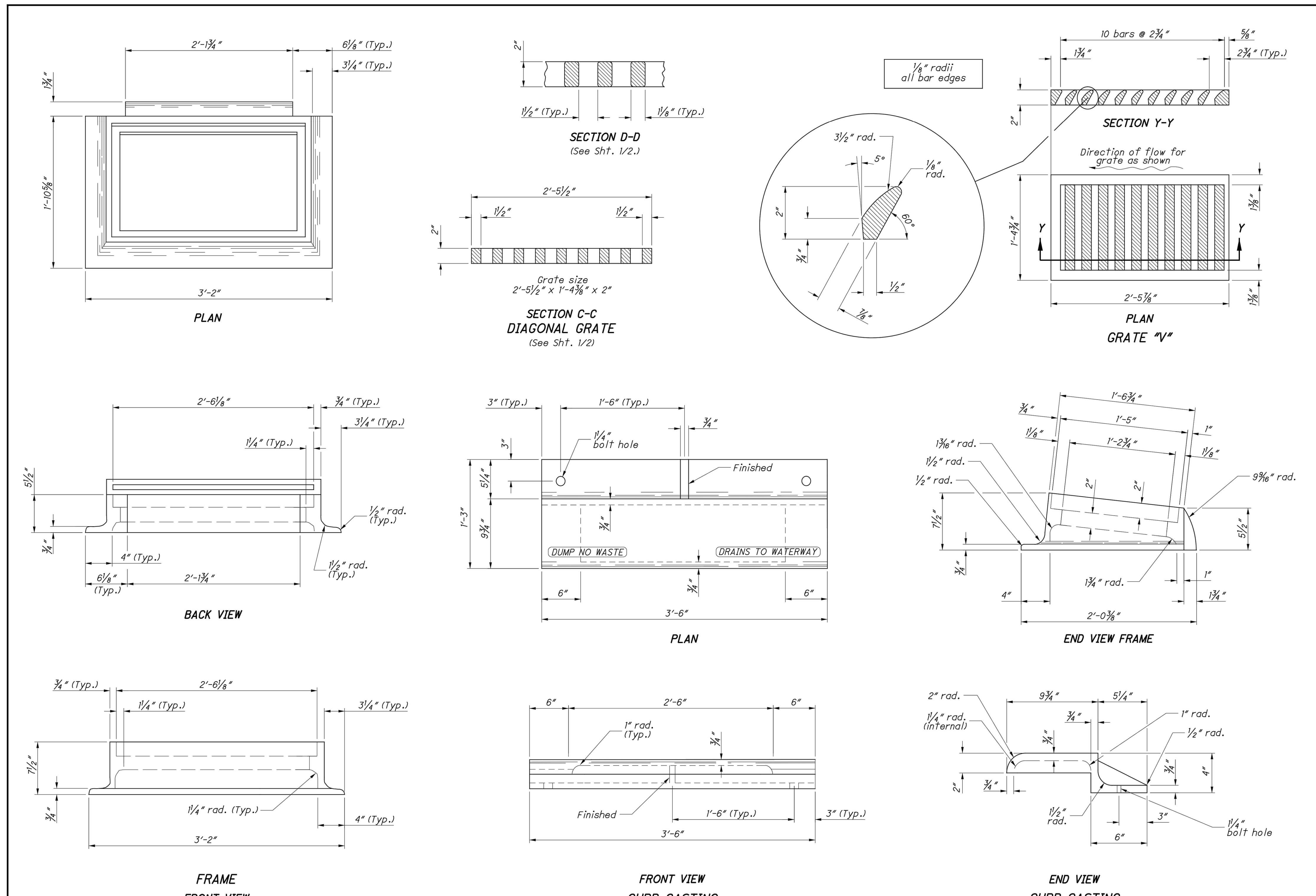

STATE OF OHIO DEPARTMENT OF TRANSPORTATION HYDRAULIC ENGINEER — Jeffery E. Syar
REVISIONS: 7-20-12, 1-18-13, 1-17-14, 1-15-16, 7-20-18, 1-15-21, 7-16-21
ROADWAY HYDRAULIC ENGINEER — M. Cozzoli
OFFICE OF HYDRAULICS ENGINEERING
STANDARD HYDRAULIC CONSTRUCTION DRAWING — CATCH BASIN No. 3A
DRAWING CB-3A — 2/2

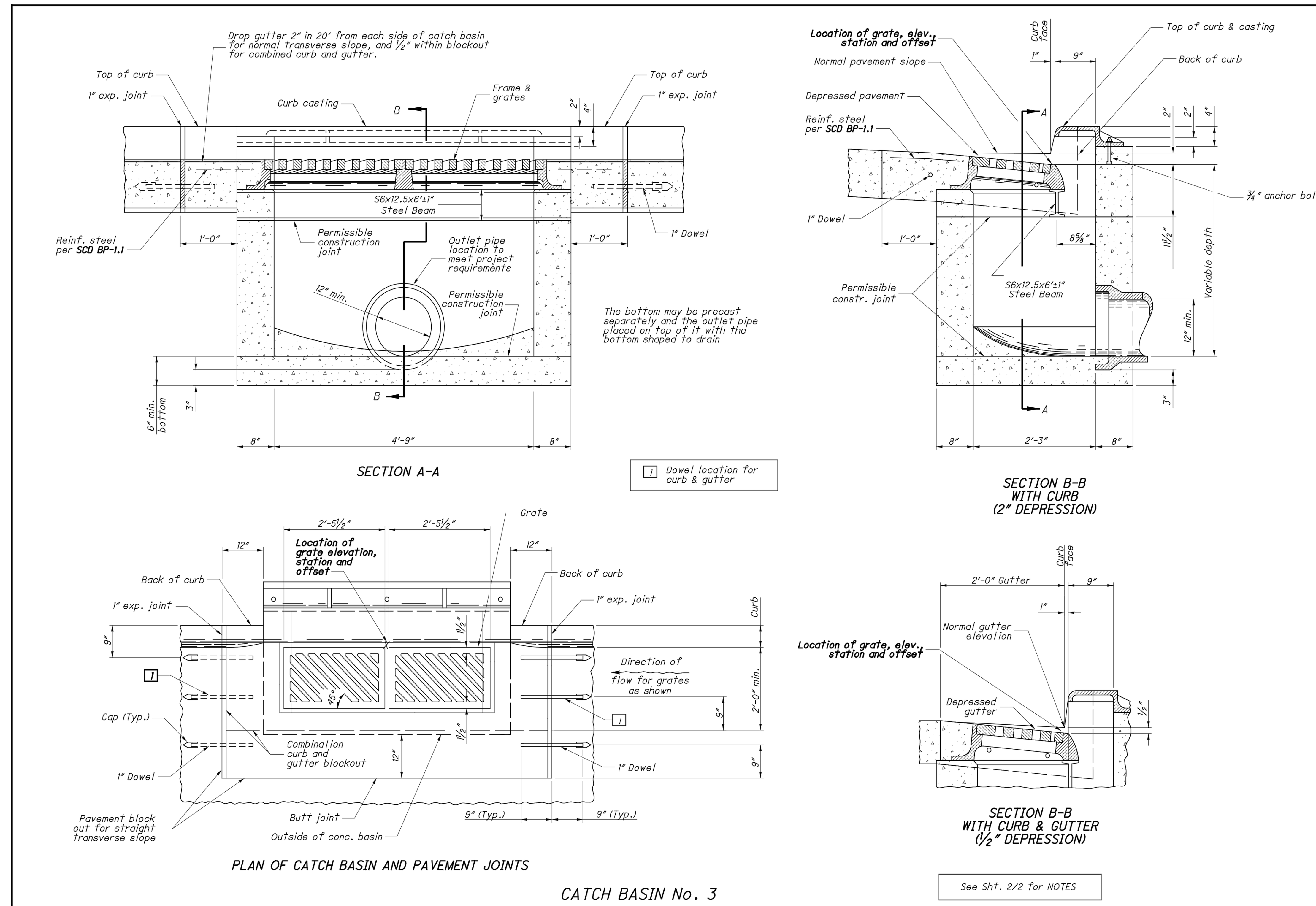

STATE OF OHIO DEPARTMENT OF TRANSPORTATION HYDRAULIC ENGINEER — Jeffery E. Syar
REVISIONS: 7-15-05, 7-20-12, 1-18-13, 1-15-16, 7-20-18, 1-15-21, 7-16-21
ROADWAY HYDRAULIC ENGINEER — M. Cozzoli
OFFICE OF HYDRAULICS ENGINEERING
STANDARD HYDRAULIC CONSTRUCTION DRAWING — CATCH BASIN No. 3
DRAWING CB-3 — 1/2

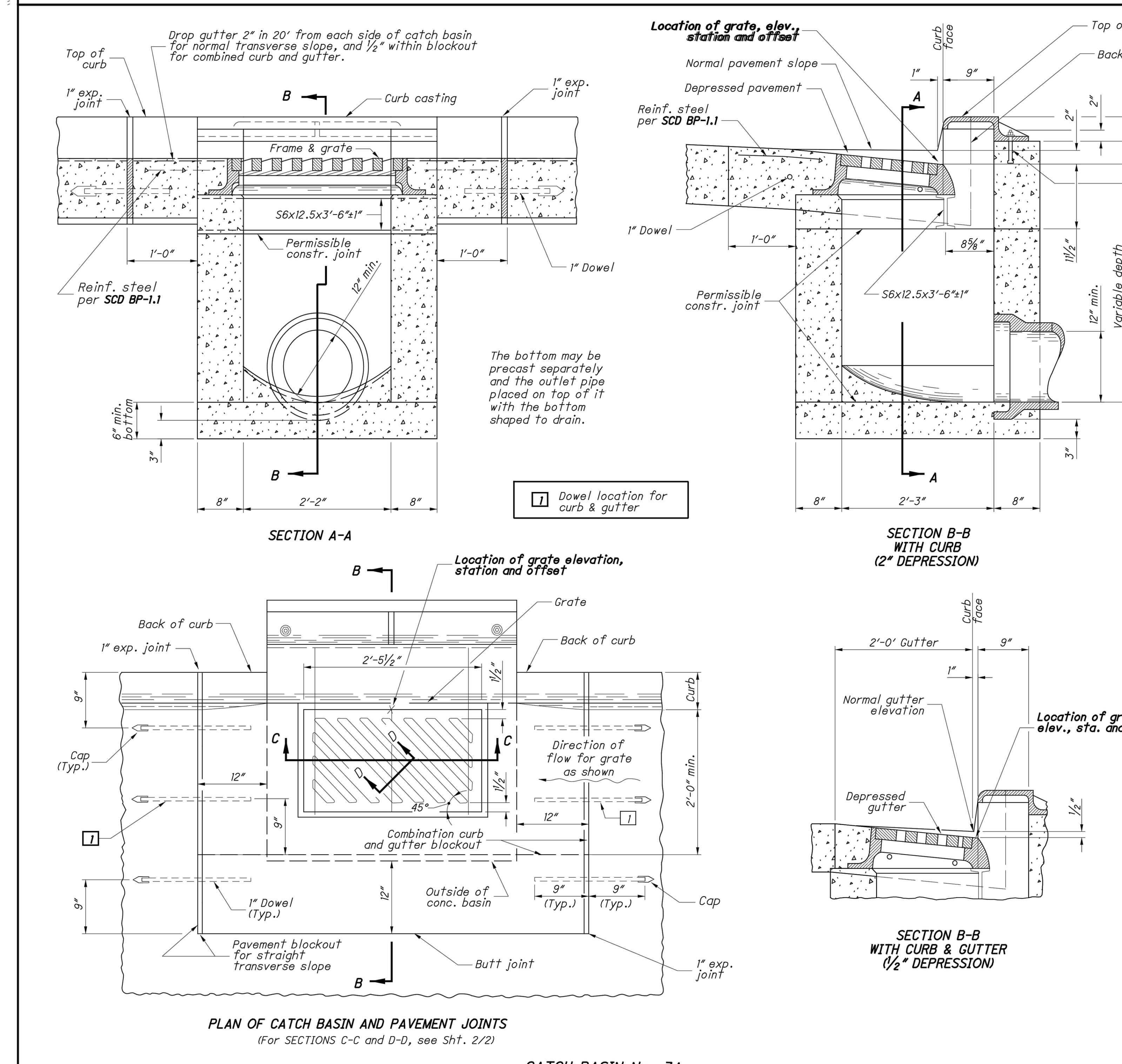

NOTES

GRATES: Provide Grate "V" unless the plans specifically require the diagonal grate. If the diagonal grate is specified, place it so that the diagonal bars direct the drainage toward the curb.

CASTINGS: Provide a design essentially the same and equally as strong as the one shown. Minimum weight:

Curb Casting . . . . . 170 lbs.
Standard Grate . . . . 127 lbs.
Frame . . . . 320 lbs.
Grate "V" . . . . 105 lbs.

Lighter weight frames and grates that meet the requirements of CMS 711.14 may also be provided. Provide grate openings and dimensions as shown here unless otherwise shown in the plans.

Cast the following text into the top of the curb casting:

"DUMP NO WASTE" and **"DRAINS TO WATERWAY"**

Print text in bold, capital letters at least ¾" high. See example on Plan & Section. "WATERWAY" may be substituted with "STREAM", "RIVER", "LAKE", etc. Actual placement and logo may vary per manufacturer.

BEARING AREAS: Fit and finish the frame and grate to provide a firm and even seat. No projections are permitted on bearing areas, and the grate must seat in its frame without rocking.

WALLS: When used in place of concrete, construct brick side walls with 8" nominal thickness.

PRECAST CONSTRUCTION: Permitted, except for the apron. Meet CMS 706.13 concrete requirements. Provide precast walls at least 6" thick with sufficient reinforcing to permit shipping and placement without damage. Reduce the wall thickness from the outside.

MINIMUM DEPTH: The minimum depth is per the cover requirements for that pipe type.

OPENINGS: Ensure pipe openings are the O.D. of the pipe being supplied plus 2" when fabricated or field cut. Fill any voids per C&MS 611.

DOWELS: Furnish four 1"x18" dowels for concrete pavement or gutter blockout. See **SCD BP-2.2** for dowel details.

BLOCKOUT: Pave blockouts with 4000 psi compressive strength concrete in PCC pavement or gutter. Blockouts are paid for as part of the pavement or gutter with no deduction in pavement, curb or gutter quantities because of the castings. Cast a 4000 psi compressive strength concrete apron, the size of the 2'-0" gutter blockout, in place in asphalt pavement (no dowels required) with the cost included in the catch basin bid price. Provide the 1" expansion joint in the curb for all curb types with no deduction made in curb quantities.

PAYMENT: All materials and labor, including excavation and backfilling, are paid for under **Item 611 - Catch Basin, No. 3A.**

STATE OF OHIO DEPARTMENT OF TRANSPORTATION HYDRAULIC ENGINEER — Jeffery E. Syar
REVISIONS: 7-20-12, 1-18-13, 1-17-14, 1-15-16, 7-20-18, 1-15-21, 7-16-21
ROADWAY HYDRAULIC ENGINEER — M. Cozzoli
OFFICE OF HYDRAULICS ENGINEERING
STANDARD HYDRAULIC CONSTRUCTION DRAWING — CATCH BASIN No. 3A
DRAWING CB-3A — 1/2

STATE OF OHIO — CHRISTOPHER MICHAEL KOGELNIK — E-70964 — REGISTERED PROFESSIONAL ENGINEER

CT consultants — engineers · architects · planners — A Verdantas Company

NO	REVISION	DATE
.		.
.		.
.		.
.		.
.		.
.		.
.		.

SCALE: AS SHOWN
DATE: 08/01/2023
DESIGNED BY: CMK
DRAWN BY: AMM
CHECKED BY: CMK

VILLAGE OF LOWELLVILLE
YOUNGSTOWN-LOWELLVILLE RD. STORM SEWER IMPROVEMENTS
VILLAGE OF LOWELLVILLE, OHIO

CONSTRUCTION DETAILS - 03

PROJECT NO: 220549
DRAWING NAME: CD-03
SHEET 06 OF 14

SECTION VIEWS OF REINFORCED PRECAST MANHOLES

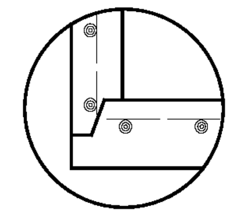

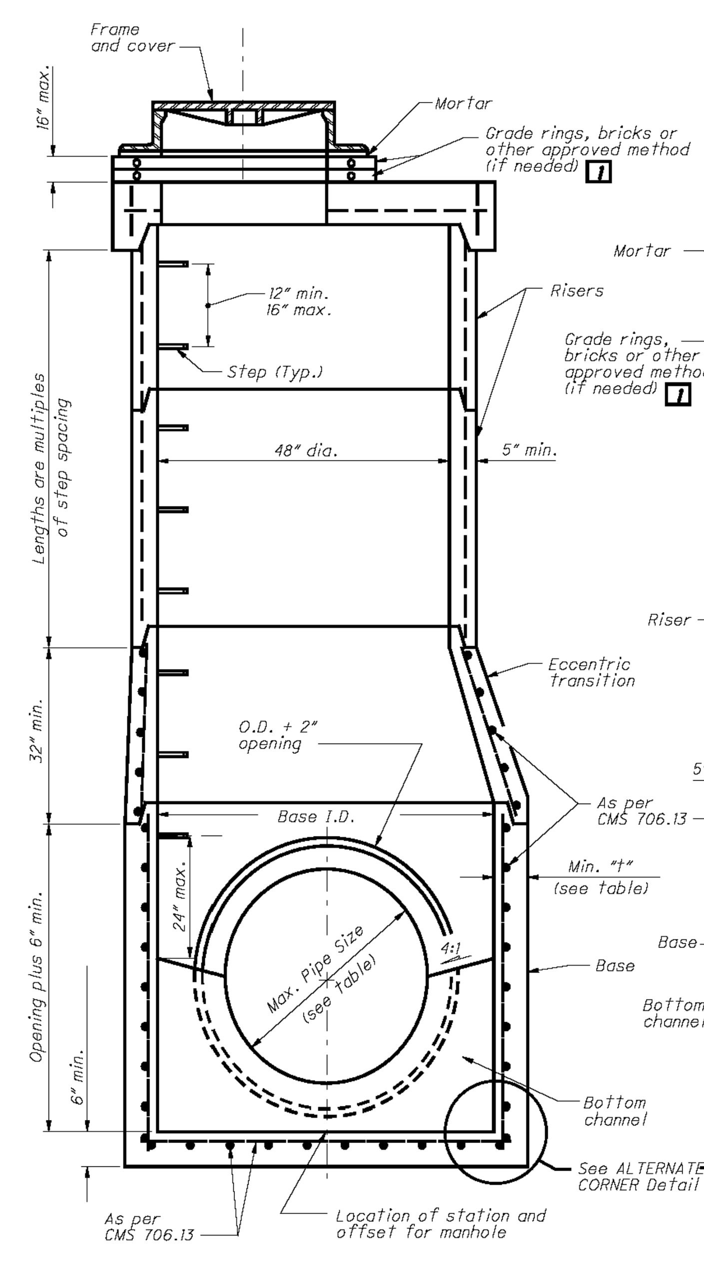

60" to 108" PRECAST BASE
SEE TABLE FOR MAXIMUM PIPE SIZES

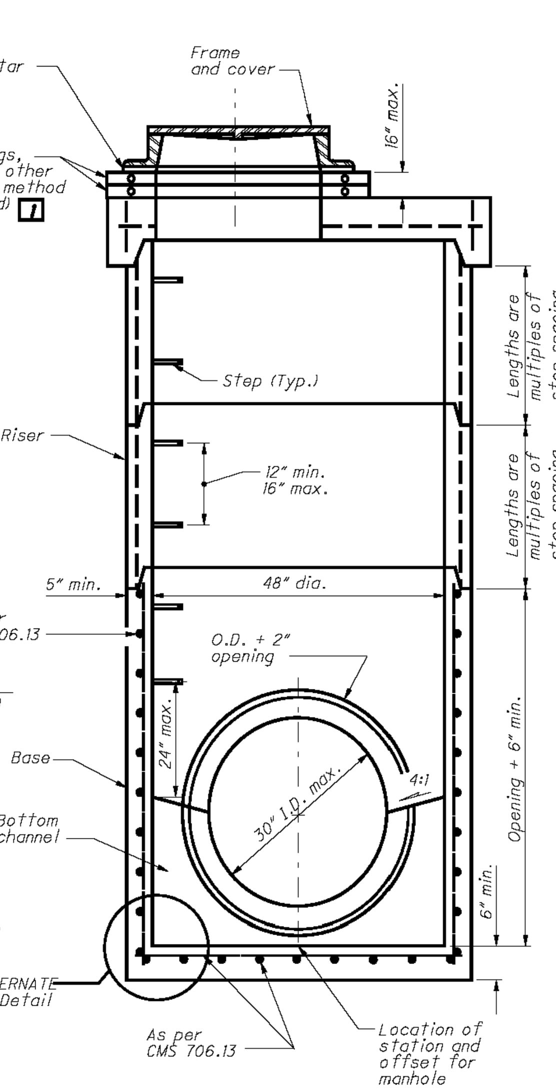

48" PRECAST BASE
FOR 30" AND SMALLER PIPE

NOTES

GENERAL: With normal soil and site conditions, this standard precast manhole may be used for any required manhole depth. Cast and assemble sections of the precast manhole with either all tongue or all groove ends up. Lift holes may be provided in each section for handling. Leave handling device for the flat slab in place.

TOP: Provide a flat slab for this section unless an eccentric cone is specified.

TRANSITION (OR REDUCER): This section can be either eccentric cone or flat slab.

BASE: Manhole No. 3 is shown with a monolithic floor and riser which may be cast in one or two operations. A permissible alternate is to cast and ship the floor and barrel separately. Provide openings for inlet and outlet pipes, either when the unit is cast or later, to meet project requirements. Bottom channels may be formed of concrete, precast in the base or field constructed as shown on **SCD MH-1.1 and MH-3.1.**

RISER SECTIONS: Openings for 18" and smaller inlet pipes may be either prefabricated or cut in the field provided the sides of the pipe at the springline do not project into the manhole.

CONNECTIONS: Connections between precast manhole sections and pipes on sanitary sewers may be sealed with resilient connectors conforming to ASTM C 923.

JOINT SEAL: Furnish resilient seal between precast manhole sections on sanitary sewers and flexible gasket joints per CMS 706.11.

OPENINGS: The maximum pipe opening is the O.D. of the pipe being supplied plus 2" when fabricated or field cut. Fill any voids per CMS 601.

MATERIALS: Provide materials for bases and other precast sections, including reinforcement not specified here, that meet the requirements of CMS 706.13.

DROP PIPE: When specified on the plans, construct drop pipe as shown on **SCD MH-3.1.**

STEPS, FRAMES AND COVERS: Meet the requirements shown on **SCD MH-1.1.**

TOP SLAB REBAR: Use epoxy coated reinforcing steel within the top slab.

LEGEND

1 Reconstruction to grade only. Approved materials are kept on file by the Office of Materials Management.

MAXIMUM PIPE SIZES		
BASE I.D.	**MIN. "t"**	**MAX. PIPE SIZE**
60"	5"	36"
72"	6"	48"
84"	7"	54"
90"	7½"	60"
96"	8"	66"
108"	9"	72"

STATE OF OHIO DEPARTMENT OF TRANSPORTATION — STATE HYDRAULIC ENGINEER
REVISIONS: 7-20-01, 7-19-02, 7-15-05, 1-20-06, 7-20-12, 1-18-13
ROADWAY HYDRAULIC ENGINEER Matt Cozzoli
OFFICE OF HYDRAULIC ENGINEERING
STANDARD HYDRAULIC CONSTRUCTION DRAWING — MANHOLE No. 3
SCD NUMBER MH-1.2
1/2

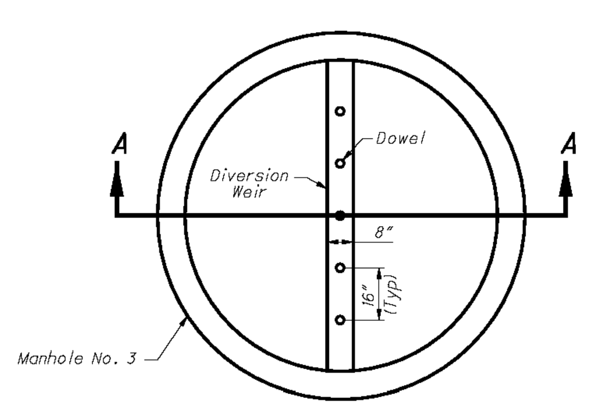

MANHOLE NO. 3 W/ __" BASE I.D. AND __" WEIR
(NTS)

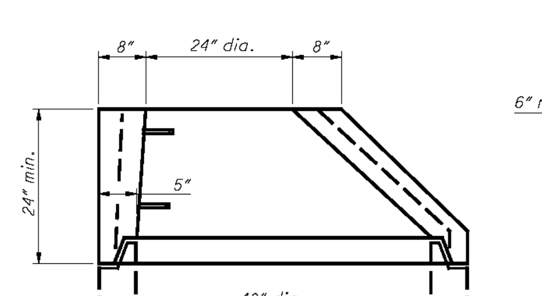

ALTERNATE ECCENTRIC CONE TOP
(Only if specified)

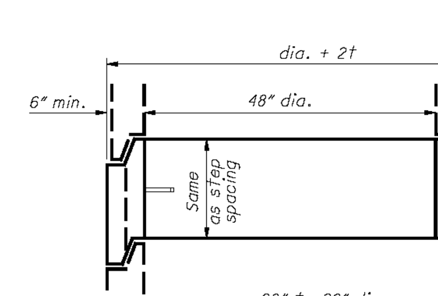

FLAT SLAB TRANSITION

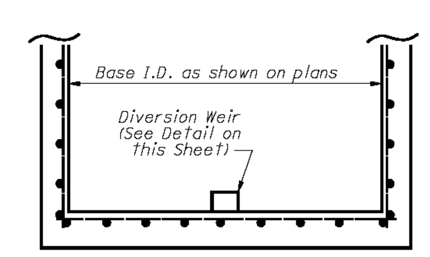

SECTION A-A
(NTS)

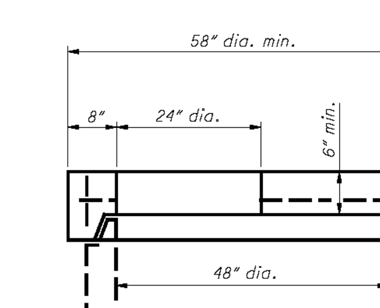

FLAT SLAB TOP

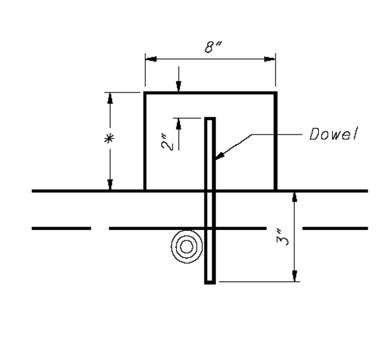

* Furnish weir height as shown in plans.

DIVERSION WEIR DETAIL
(NTS)

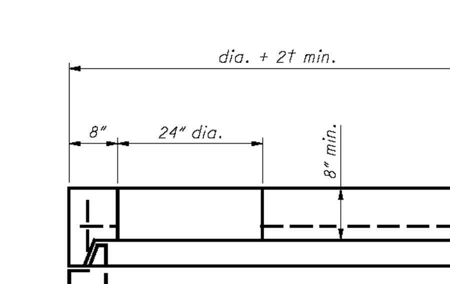

FLAT SLAB TOP

NOTES

MANHOLE NO. 3 W/__" BASE I.D. AND __" DIVERSION WEIR: Furnish manhole base with precast diversion weir or construct diversion weir from Structural Concrete, 4000 psi compressive strength concrete or Brick and Masonry Units conforming to CMS 611. A bottom channel section for the manhole is not required when a diversion weir is specified on the plans.

Place diversion weir perpendicular to flow of inflowing trunk sewer. Dowel concrete or masonry units into the base of the manhole to a depth of 3" using epoxy coated #4 reinforcing bars. Start dowels at the center of the diversion weir and space 16" on center across the entire weir.

All materials and labor, including excavation and backfill, are paid for at the contract price for **ITEM 611 - MANHOLE NO. 3 WITH __" BASE I.D. AND __" DIVERSION WEIR.**

STATE OF OHIO DEPARTMENT OF TRANSPORTATION — STATE HYDRAULIC ENGINEER
REVISIONS: 7-20-01, 7-19-02, 7-15-06, 7-20-06, 7-20-12, 1-18-13
ROADWAY HYDRAULIC ENGINEER Matt Cozzoli
OFFICE OF HYDRAULIC ENGINEERING
STANDARD HYDRAULIC CONSTRUCTION DRAWING — MANHOLE No. 3
SCD NUMBER MH-1.2
2/2

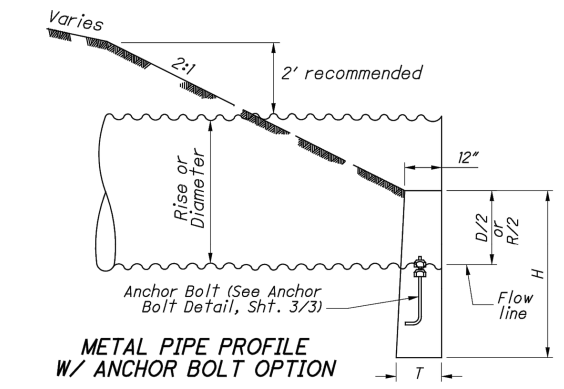

METAL PIPE PROFILE W/ ANCHOR BOLT OPTION

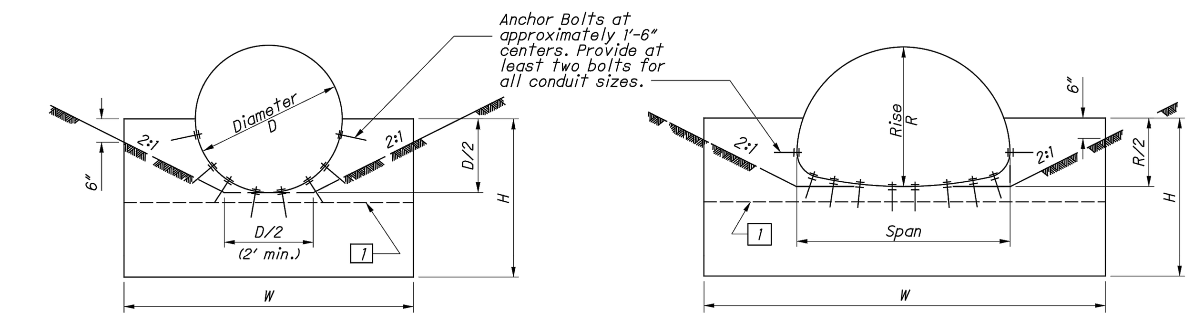

METAL PIPE END TREATMENT "A" W/ ANCHOR BOLT OPTION

CAST-IN-PLACE HW FOR CORRUGATED METAL PIPE & PLASTIC PIPE (English)																
CIRCULAR					PIPE ARCH						PIPE ARCH					
D	W	H	T	CONC. cu. yds.	SPAN	RISE	W	H	T	CONC. cu. yds.	SPAN	RISE	W	H	T	CONC. cu. yds.
12"	2'-0"	3'-0"	12"	0.21	2.67"x½" Corrugations						*81"	59"	12'-4"	5'-5"	15"	2.14
15"	2'-6"	3'-2"	12"	0.27	17"	13"	3'-0"	3'-0"	12"	0.31	87"	63"	13'-0"	5'-7"	17"	2.50
18"	3'-0"	3'-3"	12"	0.33	21"	15"	3'-6"	3'-0"	12"	0.35	95"	67"	14'-0"	5'-9"	20"	3.14
21"	3'-6"	3'-4"	12"	0.39	24"	18"	4'-0"	3'-2"	12"	0.43	103"	71"	15'-0"	5'-11"	22"	3.54
24"	4'-0"	3'-6"	12"	0.46	28"	20"	4'-6"	3'-3"	12"	0.48	112"	75"	16'-0"	6'-1"	24"	3.96
27"	4'-6"	3'-8"	12"	0.53	35"	24"	5'-6"	3'-5"	12"	0.61	117"	79"	17'-9"	6'-3"	25"	4.89
30"	5'-0"	3'-9"	12"	0.60	42"	29"	6'-6"	3'-7"	12"	0.73	128"	83"	18'-0"	6'-5"	26"	5.01
33"	5'-6"	3'-10"	12"	0.68	49"	33"	7'-8"	3'-9"	12"	0.90	137"	87"	19'-0"	6'-7"	27"	5.45
36"	6'-0"	4'-0"	12"	0.76	57"	38"	9'-0"	4'-0"	12"	1.10	142"	91"	20'-9"	6'-9"	27"	6.31
39"	6'-6"	4'-2"	12"	0.84	64"	43"	10'-0"	4'-4"	12"	1.31	6"x2" Corrugations (18" Corner Radius)					
42"	7'-0"	4'-3"	12"	0.92	71"	47"	11'-0"	4'-8"	12"	1.54						
48"	8'-0"	4'-6"	12"	1.10	*77"	52"	11'-8"	5'-3"	12"	1.84	*6'-1"	4'-7"	11'-8"	5'-7"	12"	1.89
54"	9'-3"	4'-9"	12"	1.33	*83"	57"	12'-4"	5'-5"	15"	2.46	*6'-4"	4'-9"	12'-0"	5'-8"	14"	2.12
60"	10'-6"	5'-6"	12"	1.78	6"x2" Corrugations						*6'-9"	4'-11"	12'-4"	5'-9"	15"	2.42
66"	11'-9"	5'-9"	12"	2.06	(31" Corner Radius)						*7'-0"	5'-1"	12'-8"	5'-10"	16"	2.44
72"	13'-0"	6'-0"	12"	2.37	13'-3"	9'-4"	23'-11"	7'-11"	32"	9.63	7'-3"	5'-3"	12'-11"	5'-11"	17"	2.69
78"	14'-3"	6'-3"	14"	2.94	13'-6"	9'-6"	24'-9"	8'-0"	32"	10.12	7'-8"	5'-5"	13'-2"	6'-0"	18"	2.77
84"	15'-6"	6'-6"	14"	3.30	14'-0"	9'-8"	24'-10"	8'-1"	33"	10.33	7'-11"	5'-7"	14'-0"	6'-1"	20"	3.15
90"	16'-9"	6'-9"	16"	4.00	14'-2"	9'-10"	25'-9"	8'-2"	33"	10.87	8'-2"	5'-9"	14'-8"	6'-2"	21"	3.45
96"	18'-0"	7'-0"	16"	4.40	14'-5"	10'-0"	26'-7"	8'-3"	33"	11.39	8'-7"	5'-11"	15'-0"	6'-3"	22"	3.75
102"	19'-3"	7'-3"	18"	5.28	14'-11"	10'-2"	26'-9"	8'-4"	34"	11.68	8'-10"	6'-1"	15'-10"	6'-4"	23"	4.15
108"	20'-6"	7'-6"	20"	6.21	15'-4"	10'-4"	26'-11"	8'-5"	34"	11.96	9'-4"	6'-3"	16'-0"	6'-5"	24"	4.65
114"	21'-9"	7'-9"	22"	7.25	15'-7"	10'-6"	27'-9"	8'-6"	34"	12.51	9'-6"	6'-5"	16'-10"	6'-6"	26"	4.93
120"	23'-0"	8'-0"	24"	8.38	15'-10"	10'-8"	28'-7"	8'-7"	35"	13.06	9'-9"	6'-7"	17'-9"	6'-7"	27"	5.41
*126"	23'-0"	8'-3"	26"	8.64	16'-3"	10'-10"	28'-8"	8'-8"	35"	13.34	10'-3"	6'-9"	17'-10"	6'-8"	27"	5.45
132"	23'-0"	8'-6"	28"	9.23	16'-6"	11'-0"	29'-7"	8'-9"	35"	13.94	10'-8"	6'-11"	17'-11"	6'-9"	27"	5.59
138"	24'-1"	8'-9"	30"	10.50	17'-0"	11'-2"	29'-8"	8'-10"	36"	14.24	10'-11"	7'-1"	18'-10"	6'-10"	28"	5.97
144"	25'-2"	9'-0"	32"	11.89	17'-2"	11'-4"	30'-7"	8'-11"	36"	14.84	11'-5"	7'-3"	18'-11"	6'-11"	28"	6.12
150"	26'-4"	9'-3"	34"	13.38	17'-5"	11'-6"	31'-5"	9'-0"	36"	15.42	11'-7"	7'-5"	19'-9"	7'-0"	28"	6.52
156"	27'-5"	9'-6"	36"	15.01	17'-11"	11'-8"	31'-7"	9'-1"	37"	15.83	11'-10"	7'-7"	20'-9"	7'-1"	29"	6.94
162"	28'-7"	9'-9"	38"	16.75	18'-1"	11'-10"	32'-5"	9'-2"	37"	16.43	12'-4"	7'-9"	20'-10"	7'-2"	29"	7.12
168"	29'-8"	10'-0"	40"	18.61	18'-7"	12'-0"	32'-6"	9'-3"	37"	16.78	12'-6"	7'-11"	21'-8"	7'-3"	29"	7.53
174"	30'-9"	10'-3"	42"	20.28	18'-9"	12'-2"	33'-4"	9'-4"	38"	17.43	12'-8"	8'-1"	22'-7"	7'-4"	30"	7.95
180"	31'-11"	10'-6"	43"	21.87	19'-3"	12'-4"	33'-5"	9'-5"	38"	17.78	12'-10"	8'-4"	23'-7"	7'-5"	30"	8.48
186"	33'-0"	10'-9"	44"	23.54	19'-6"	12'-6"	34'-5"	9'-6"	38"	18.49	13'-5"	8'-5"	23'-7"	7'-6"	30"	8.63
192"	34'-2"	11'-0"	45"	25.30	19'-8"	12'-8"	35'-3"	9'-7"	39"	19.19	13'-11"	8'-7"	23'-7"	7'-7"	31"	8.81
198"	35'-3"	11'-3"	46"	27.12	19'-11"	12'-10"	36'-3"	9'-8"	39"	19.95	14'-1"	8'-9"	25'-1"	7'-8"	31"	9.29
204"	36'-4"	11'-6"	47"	29.15	20'-5"	13'-0"	36'-3"	9'-9"	39"	20.30	14'-3"	8'-11"	25'-6"	7'-9"	31"	9.78
210"	37'-6"	11'-9"	48"	31.03	20'-7"	13'-2"	37'-2"	9'-10"	40"	21.05	14'-10"	9'-1"	25'-6"	7'-10"	32"	10.25
216"	38'-7"	12'-0"	49"	33.43	3"x1" Corrugations						15'-4"	9'-3"	25'-6"	7'-11"	32"	10.25
222"	39'-9"	12'-3"	50"	36.26	40"	31"	6'-6"	3'-7"	12"	0.70	15'-6"	9'-5"	26'-5"	8'-0"	32"	10.74
228"	40'-10"	12'-6"	51"	37.52	46"	36"	7'-8"	3'-9"	12"	0.85	15'-8"	9'-7"	27'-5"	8'-1"	33"	11.28
234"	42'-0"	12'-9"	52"	39.86	53"	41"	9'-0"	4'-0"	12"	1.06	15'-10"	9'-10"	28'-5"	8'-2"	33"	12.00
240"	43'-1"	13'-0"	53"	42.28	60"	46"	10'-0"	4'-4"	12"	1.27	16'-5"	9'-11"	28'-5"	8'-3"	33"	12.09
246"	44'-2"	13'-3"	54"	44.83	66"	51"	11'-0"	4'-8"	12"	1.54	16'-7"	10'-1"	29'-4"	8'-4"	34"	12.64
252"	45'-4"	13'-6"	55"	47.44	*73"	55"	11'-8"	5'-3"	12"	1.81	--	--	--	--	--	--

* Determine channel configuration for pipe sizes between end treatment "A" and end treatment "B" by 2:1 slopes passing through a point 6" below the top and at each side of the headwall. For end treatment "B", 2:1 slopes are tangent to pipe.

1 Top surface of 6" inlet headwall extension

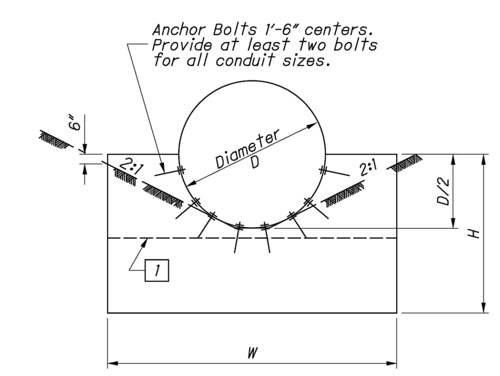

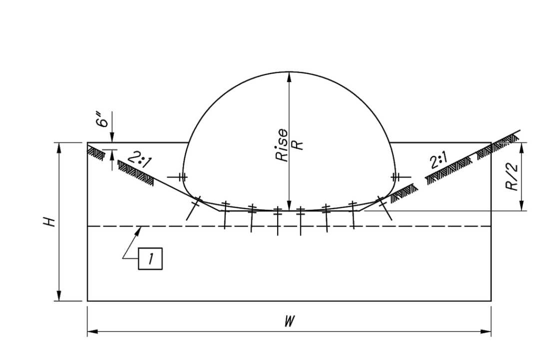

METAL PIPE END TREATMENT "B" W/ ANCHOR BOLT OPTION

DESIGN AGENCY: OFFICE OF STRUCTURAL ENGINEERING
STATE OF OHIO DEPARTMENT OF TRANSPORTATION — 07-20-18 DATE — ADMINISTRATOR
REVISIONS: 07-30-2007, 07-20-2012, 01-18-2013, 01-16-2015, 07-17-2015, 01-15-2016, 07-21-2017, 07-20-2018
HW-2.1
STANDARD BRIDGE DRAWING — HALF-HEIGHT HEADWALLS FOR CORRUGATED METAL PIPE AND PLASTIC PIPE
1/4

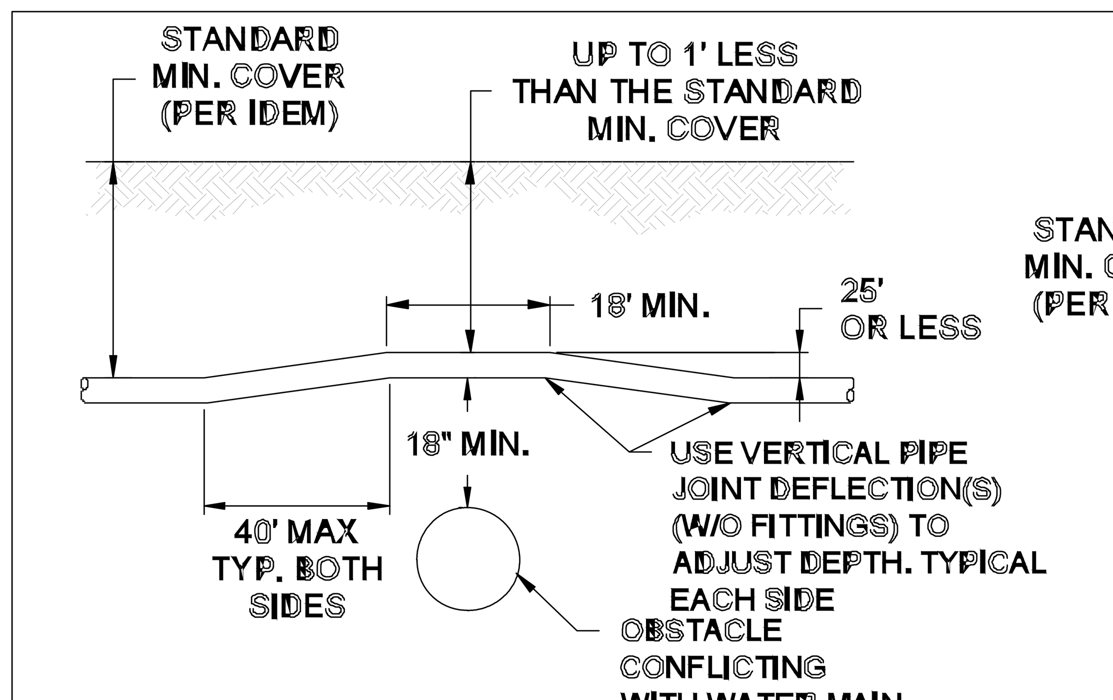

"A" CROSSING ABOVE

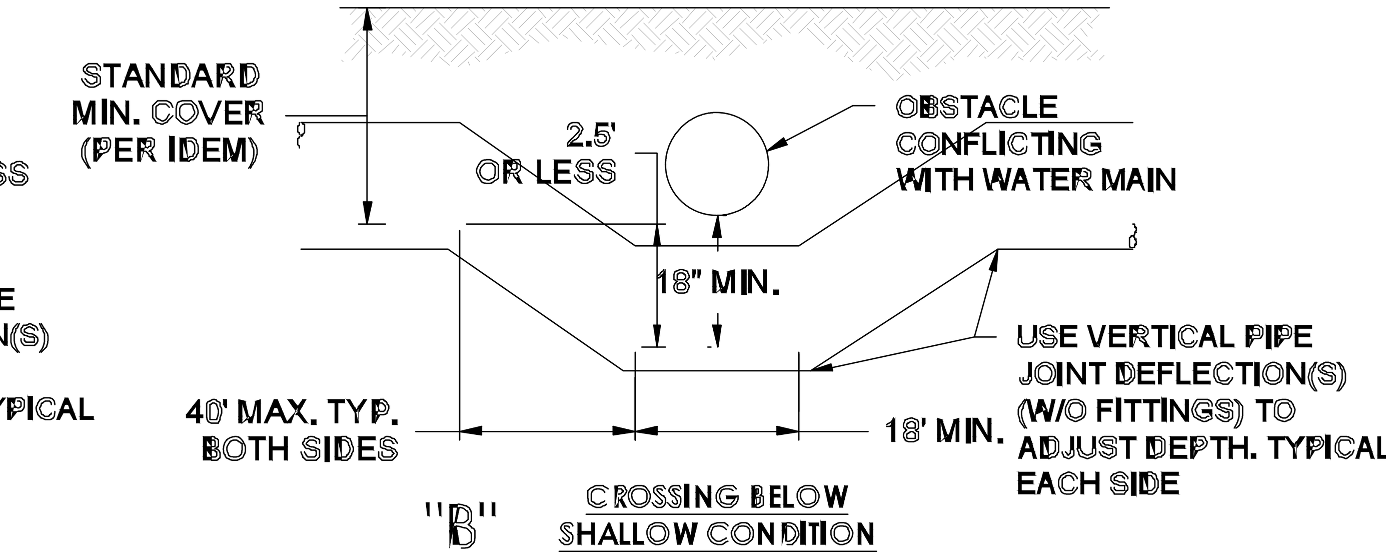

"B" CROSSING BELOW SHALLOW CONDITION

* PROVIDE ADEQUATE SUPPORT IF THE OBSTACLE IS IN PLACE BEFORE THE WATER MAIN IS CONSTRUCTED

MIN. RESTRAINED JOINT LENGTH REQUIRED FOR THE GIVEN PIPE SIZE, DEPTH, MATERIAL, SOIL CONDITION, ETC., USE 1.5:1 SAFETY FACTOR & 150 PSI TEST PRESSURE. TYPICAL EACH SIDE.

EXISTING WATERLINE TO BE RESTRAINED WITHIN 18' OF FIRST BEND.

DEVIATIONS FROM THESE EXAMPLES WILL REQUIRE PERMIT APPLICANT TO SUBMIT THE COMPLETE "APPLICATION FOR CONSTRUCTION PERMIT FOR PUBLIC WATER SYSTEM (STATE FORM 35058)" WITH DETAILED INFORMATION ABOUT THE ALTERNATIVE TECHNICAL STANDARD.

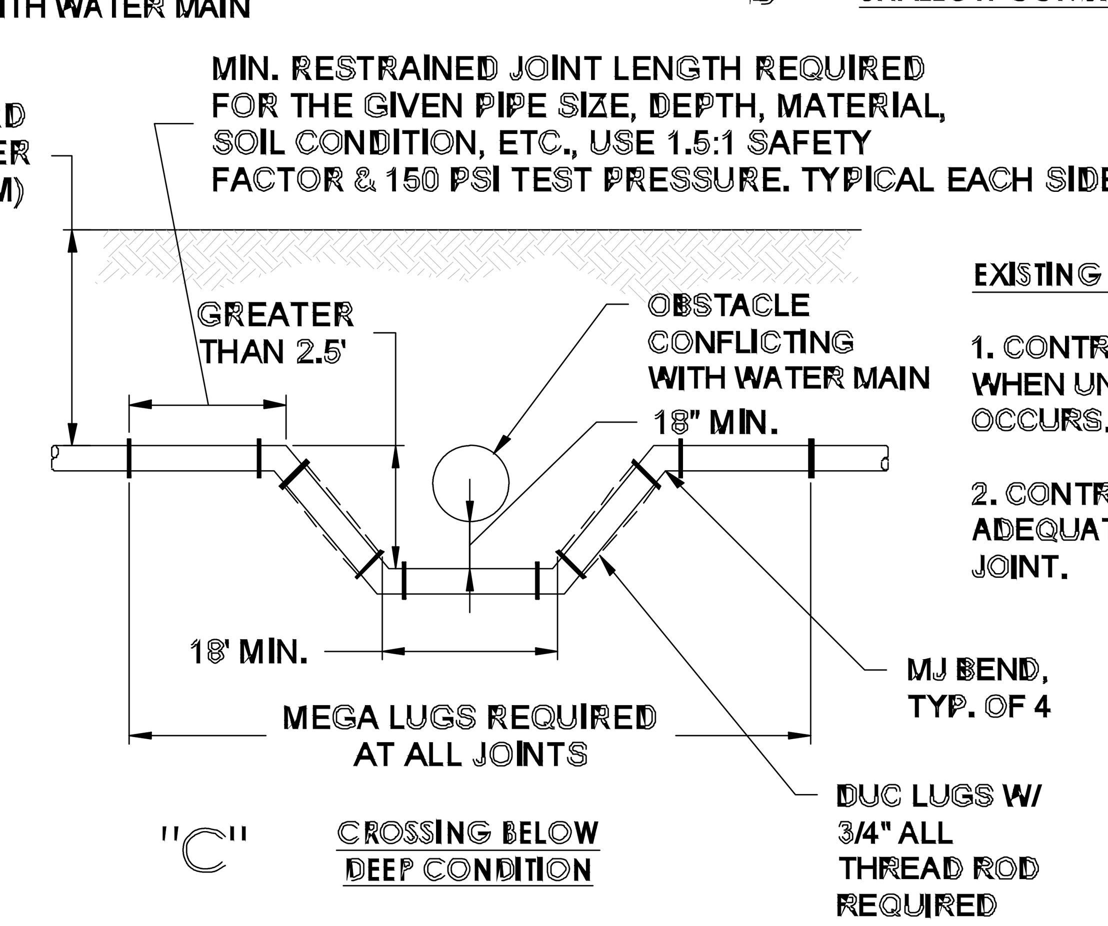

"C" CROSSING BELOW DEEP CONDITION

EXISTING WATER MAIN CROSSINGS:

1. CONTRACTOR TO NOTIFY AQUA Ohio INC. WHEN UNDERMINING OF EXISTING MAIN OCCURS.

2. CONTRACTOR SHALL PROVIDE ADEQUATE BACKING ON EACH SIDE OF THE JOINT.

NOTE: CONSTRUCTION DETAIL FROM AQUA

DESIGN CRITERIA FOR UTILITY CONFLICTS/CROSSINGS

DRAWING NUMBER: SD-114

STATE OF OHIO — CHRISTOPHER MICHAEL KOGELNIK — E-70964 — REGISTERED — PROFESSIONAL ENGINEER

CT consultants — engineers · architects · planners — A Verdantas Company

NO	REVISION	DATE
	.	.
	.	.
	.	.
	.	.
	.	.
	.	.
	.	.

SCALE: AS SHOWN
DATE: 08/01/2023
DESIGNED BY: CMK
DRAWN BY: AMM
CHECKED BY: CMK

VILLAGE OF LOWELLVILLE
YOUNGSTOWN-LOWELLVILLE RD. STORM SEWER IMPROVEMENTS
VILLAGE OF LOWELLVILLE, OHIO

CONSTRUCTION DETAILS - 04

PROJECT NO: 220549
DRAWING NAME: CD-04
SHEET 07 OF 14

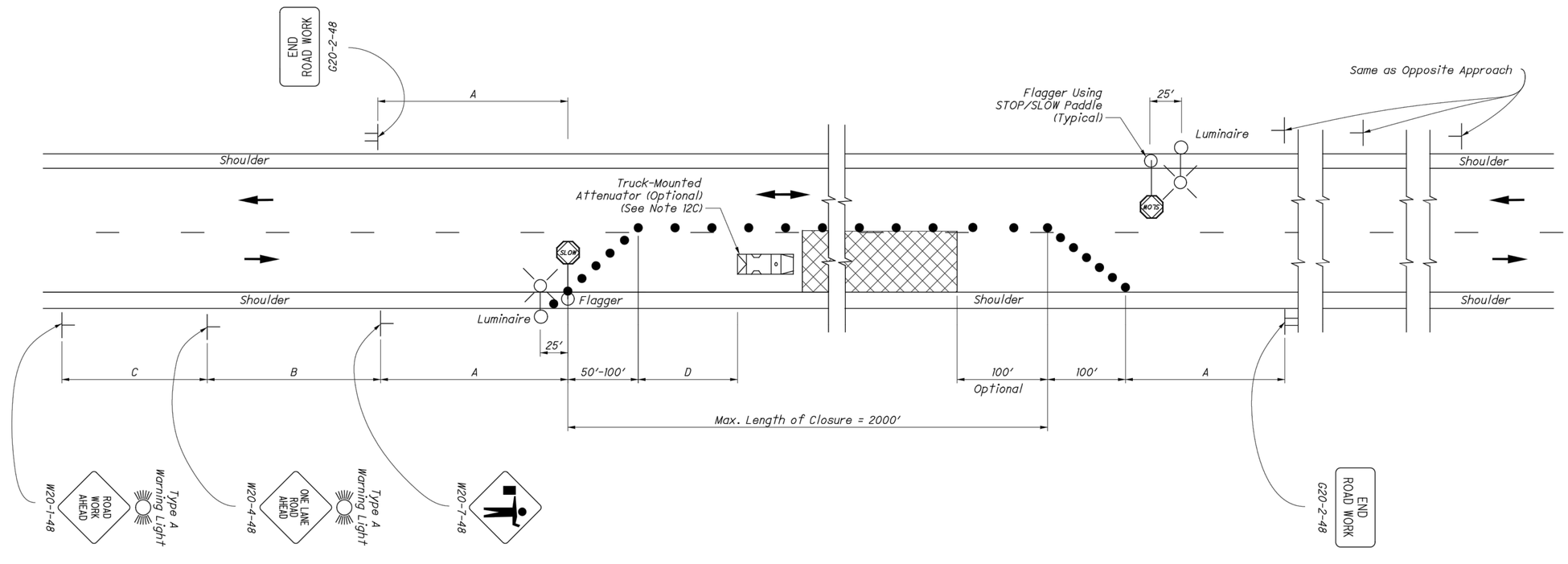

TABLE I (SIGN SPACING)

ROAD TYPE	DISTANCE BETWEEN SIGNS (FT)		
	A	B	C
Two-Lane (≤ 40 MPH)	100	100	100
Two-Lane (45-50 MPH)	350	350	350
Two-Lane (55-60 MPH)	500	500	500

TABLE II

SPEED LIMIT (MPH)	BUFFER (D) (FT) MIN.
25	155
30	200
35	250
40	305
45	360
50	425
55	495
60	570

LEGEND

- WORK AREA
- DRUMS/CONES
- DIRECTION OF TRAVEL
- SHADOW VEHICLE WITH TMA

THIS DRAWING REPLACES MT-97.10 DATED 07-18-2014.

STANDARD ROADWAY CONSTRUCTION DRAWING

FLAGGER CLOSING 1 LANE OF A 2-LANE HIGHWAY - STATIONARY OPERATION

SCD NUMBER **MT-97.10**

OFFICE OF ROADWAY ENGINEERING

STDS. ENGINEER Soisson

STATE OF OHIO DEPARTMENT OF TRANSPORTATION ADMINISTRATOR David L. Holstein

REVISION DATE 04-19-2019

1 / 2

STATE OF OHIO CHRISTOPHER MICHAEL KOGELNIK E-70064 REGISTERED PROFESSIONAL ENGINEER

CT consultants engineers • architects • planners A Verdantas Company

NO	REVISION	DATE

SCALE: AS SHOWN
DATE: 08/01/2023
DESIGNED BY: CMK
DRAWN BY: AMM
CHECKED BY: CMK

VILLAGE OF LOWELLVILLE
YOUNGSTOWN-LOWELLVILLE RD. STORM SEWER IMPROVEMENTS
VILLAGE OF LOWELLVILLE, OHIO

MAINTENANCE OF TRAFFIC-01

PROJECT NO: 220549
DRAWING NAME: MOT-01
SHEET 08 OF 14

NOTES:

FLAGGERS

1. Flaggers, one for each direction, shall be used to control traffic continuously for as long as a one lane operation is in effect. The flaggers shall be able to communicate with each other at all times.

LENGTH OF CLOSURE

2. Several small work areas close together should be combined into one work zone. However, the closure shall not be more than 2000′ long unless approved by the Engineer. The minimum length between closures shall be 2000′. Only one side of the road shall be closed in any one work zone.

SIGN LOCATION AND SPACING

3A. The minimum spacing between work zone signs is shown in Table I. Maximum spacing should not be greater than 1.5 times the distances shown in Table I.

3B. Sign spacing should be adjusted to avoid conflict with existing signs. Minimum spacing to existing signs shall be 200′ for speeds of 45 mph or less and a minimum of 400′ for speeds of 50 mph or greater.

3C. The location of the advance warning signs should be adjusted to provide for adequate sight distance for the existing vertical and horizontal roadway alignment.

ADJUSTMENTS FOR SIGHT DISTANCE

4. The location of the flagger station and the advance warning signs should be adjusted to provide for adequate sight distance for the existing vertical and horizontal roadway alignment.

BASIC SIGNING

5A. ROAD WORK AHEAD (W20-1) signs shall be provided on entrance ramps or roadways entering the work limits.

5B. END ROAD WORK (G20-2) signs are only required for lane closures of more than 1 day. It is intended that these signs be placed on the mainline, on all exit ramps, and on roadways exiting the work limits.

5C. Overlapping of signing for adjacent projects should be avoided where the messages could be confusing. Any ROAD WORK AHEAD (W20-1) or END ROAD WORK (G20-2) sign which falls within the limits of another traffic control zone shall be omitted or covered during the period when both projects are active.

SIGNING DETAILS

6A. The Advisory Speed (W13-1P) plaque shall be used when specified in the plan.

6B. 36″ warning signs may be used when the approach speed limit is 40 mph or less.

FLASHING WARNING LIGHTS

7. Type A flashing warning lights shown on the ROAD WORK AHEAD (W20-1) signs and on the LANE CLOSED AHEAD (W20-5) signs are required whenever a night lane closure is necessary.

DRUMS / CONES

8A. Drum spacing shall be as follows:

a) Spacing along the closure shall be 40′ center-to-center.
b) Spacing along the approach taper shall be 10′ center-to-center.

8B. Cones may be substituted for drums as follows:

a) Cones used for daytime traffic control shall have a minimum height of 28″.
b) Cones used for nighttime traffic control shall have a minimum height of 42″.
c) Use of cones at night shall be prohibited along tapers.

8C. Provisions shall be made to stabilize the cones and drums to prevent them from blowing over.

8D. A minimum of two drums shall be used to close the paved shoulder.

(RESERVED FOR FUTURE USE)

9A. (intentionally blank)

AREA ILLUMINATION

10A. Adequate area illumination of each flagger station shall be provided at night. Use of portable flood lighting is acceptable. Luminaires shall be located adjacent to each flagger station.

10B. To ensure the adequacy of floodlight placement and the elimination of glare, the Contractor and the Engineer shall drive through the worksite each night when the lighting is in place. Light placement and shielding shall be adjusted to the satisfaction of the Engineer.

INTERSECTION / DRIVEWAY ACCESS

11. Within the length of closure, provision shall be made to control traffic entering from intersecting streets and major drives as necessary to prevent wrong-way movements and to keep vehicles off of new pavement not ready for traffic. The Contractor shall:

a) Place across the closed lane, either three drums (cones) or barricades, and/or
b) Provide an additional flagger at every public street intersection and major driveway.

Drums (cones) placed across the closed lane shall be located 25′ beyond the projected pavement edges of the driveway or cross highway, as shown in Standard Construction Drawings (SCDs MT-97.11 or MT-97.12. For barricades, see SCD MT-101.60.

Existing STOP signs shall be relocated as necessary to assure proper location for the traffic conditions.

The method of control shall be subject to the approval of the Engineer.

SHADOW VEHICLE

12A. The shadow vehicle shall be in place and unoccupied whenever workers are in the work area. This vehicle shall be removed from the pavement whenver workers are not in the work area.

12B. The shadow vehicle shall be equipped with a high-intensity yellow rotating, flashing, oscillating, or strobe light(s).

12C. The shadow vehicle shall be equipped with a truck-mounted or trailer attenuator (TMA) in accordance with CMS 614.03 when called for in the plans.

CHIP SEAL OPERATIONS

13. For chip seal operations, additional signing shall be incorporated in the advanced warning area.

a) The LOOSE GRAVEL (W8-7) and FRESH TAR (W21-2) signs shall both be used in advance of the chip seal operation.
b) Repeat the LOOSE GRAVEL sign with a 35 mph Advisory Speed (W13-1) plaque every half mile per CMS 422.09.
c) The FRESH TAR and the LOOSE GRAVEL signs shall both be used for signing of side roads intersecting the work area.

THIS DRAWING REPLACES MT-97.10 DATED 07-18-2014.

STANDARD ROADWAY CONSTRUCTION DRAWING

FLAGGER CLOSING 1 LANE OF A 2-LANE HIGHWAY - STATIONARY OPERATION

SCD NUMBER MT-97.10

2/2

STATE OF OHIO DEPARTMENT OF TRANSPORTATION ADMINISTRATOR: David L. Holstein

REVISION DATE: 04-19-2019

SITE ENGINEER: Soisson

OFFICE OF ROADWAY ENGINEERING

NO	REVISION	DATE

STATE OF OHIO CHRISTOPHER MICHAEL KOGELNIK E-70064 REGISTERED PROFESSIONAL ENGINEER

consultants engineers • architects • planners
A Verdantas Company

SCALE: AS SHOWN
DATE: 08/01/2023
DESIGNED BY: CMK
DRAWN BY: AMM
CHECKED BY: CMK

VILLAGE OF LOWELLVILLE
YOUNGSTOWN-LOWELLVILLE RD. STORM SEWER IMPROVEMENTS
VILLAGE OF LOWELLVILLE, OHIO

MAINTENANCE OF TRAFFIC-02

PROJECT NO: 220549
DRAWING NAME: MOT-02
SHEET 09 OF 14

CONTROL MAP

STATE OF OHIO, COUNTY OF MAHONING,

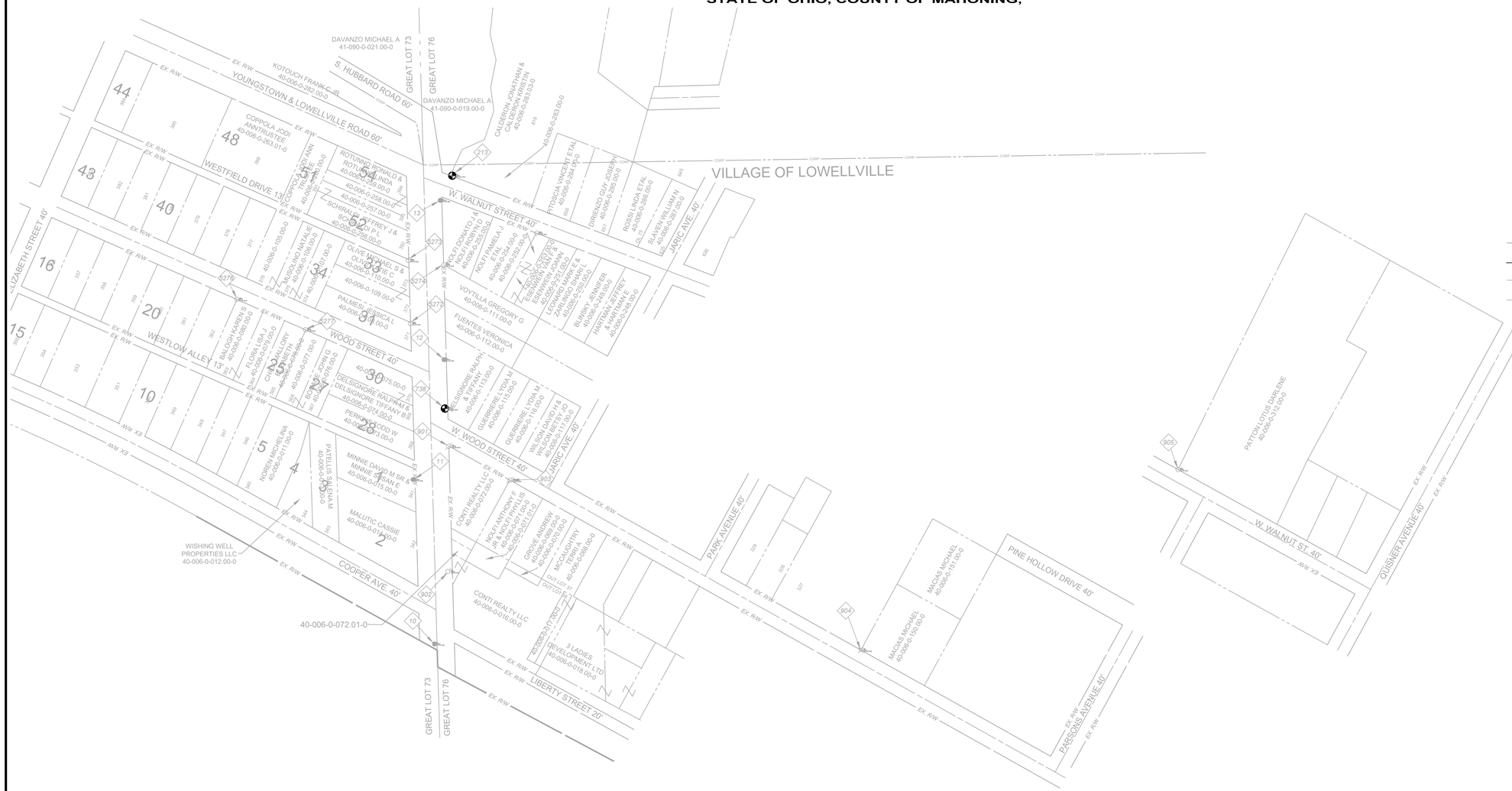

BAR SCALE

100' 50' 0' 100'

SCALE: 1"= 100'

LEGEND:

- CENTERLINE MONUMENT
- I.PIN SET
- I.PIN FOUND
- I.PIPE FOUND
- LIMITS OF PUBLIC R/W
- CENTERLINE PUBLIC R/W
- PARCEL LINES
- SUBDIVISION LINES

NOTES:

1. THIS PLAN HAS BEEN PREPARED WITHOUT THE BENEFIT OF A TITLE REPORT AND MAY BE SUBJECT TO EASEMENTS AND OTHER RESTRICTIONS, EITHER RECORDED OR UNRECORDED. THE SURVEYOR HAS MADE NO INVESTIGATION OR INDEPENDENT SEARCH FOR EASEMENTS, RECORD ENCUMBRANCES, RESTRICTIVE COVENANTS OR ANY OTHER FACTS THAT AN ACCURATE AND CURRENT TITLE SEARCH MAY DISCLOSE.
2. THESE PLANS MAY HAVE BEEN ALTERED IN SIZE BY REPRODUCTION. THIS MUST BE CONSIDERED WHEN OBTAINING SCALED DATA.
3. THE PROJECT CONTROL COORDINATE SYSTEM IS BASED UPON THE FOLLOWING:
   - HORIZONTAL DATUM - PROJECT CONTROL COORDINATES FOR THIS PROJECT HAVE BEEN ESTABLISHED BY GPS/RTK OBSERVATIONS UTILIZING THE OHIO COORDINATE SYSTEM OF 1983 (ZONE 3401-OHIO NORTH). OHIO STATE PLANE GRID COORDINATE VALUES ARE EXPRESSED IN UNITS OF U.S. SURVEY FEET.
   - VERTICAL DATUM - NORTH AMERICAN VERTICAL DATUM OF 1988 (NAVD88).
4. THE SURVEY AND STREET ALIGNMENTS SHOWN HEREON WERE OBSERVED IN THE FIELD FOR CONSTRUCTION PURPOSES ONLY AND MAY NOT BE SUITABLE FOR PROPERTY LINE SURVEYS OR OTHER PURPOSES. THE PROPERTY LINES SHOWN HEREON OUR SUBJECT TO AN ACCURATE BOUNDARY SURVEY AND ARE BASED ON FOUND MONUMENTS LOCATED IN THE FIELD BEST FIT TO THE RECORDS.
5. AN ALTA/ NSPS LAND TITLE SURVEY WAS NOT PERFORMED.
6. EASEMENTS, RECORD RESTRICTIONS AND SETBACKS WERE NOT ADDRESSED DURING THIS SURVEY.
7. ALL DIMENSIONS GIVEN ARE EXPRESSED IN US SURVEY FEET.
8. THE BENCHMARK ELEVATIONS SHOWN IN THE PROJECT CONTROL TABLE ARE AT THE TOP OF THE RED CAP OF THE IRON PIN SET.
9. IRON PINS SET ARE 5/8" IRON PINS SET WITH A RED CAP INSCRIBED WITH "CT REF"

POINT TABLE

POINT #	NORTHING	EASTING	ELEVATION	DESCRIPTION
10	506839.5000	2507798.1540	835.01	Iron Pin (Set)
11	507123.1800	2507761.0860	843.93	Iron Pin (Set)
12	507330.3320	2507814.7350	857.99	Iron Pin (Set)
13	507605.3482	2507808.1752	874.29	Iron Pin (Set)
213	507648.1182	2507828.8115	880.29	Benchmark (Set)
738	507245.9300	2507816.1993	856.09	Benchmark (Set)
901	507180.7686	2507822.8226	849.36	Mag Nail (Fnd)
902	506964.3757	2507820.9454	837.66	Mag Nail (Fnd)

POINT TABLE

POINT #	NORTHING	EASTING	ELEVATION	DESCRIPTION
903	507122.1736	2507928.5294	846.84	Mag Nail (Fnd)
904	506828.8851	2508534.6762	841.21	Drill Hole (Fnd)
905	507140.6846	2509082.5743	880.84	Iron Pin (Fnd)
5272	507392.7261	2507756.5725	859.21	Iron Pin (Fnd)
5273	507501.6004	2507753.0479	865.75	Iron Pin (Fnd)
5274	507494.0866	2507814.1316	866.96	Iron Pin (Fnd)
5275	507548.7629	2507974.5100	877.23	Iron Pin (Fnd)
5276	507434.3210	2507456.6874	851.75	Iron Pin (Fnd)
5277	507381.9702	2507575.0002	852.60	Iron Pin (Fnd)

STATE OF OHIO
CHRISTOPHER MICHAEL KOGELNIK
E-70064
REGISTERED
PROFESSIONAL ENGINEER

CT consultants
engineers • architects • planners
A Verdantas Company

NO	REVISION	DATE

SCALE: AS SHOWN
DATE: 08/01/2023
DESIGNED BY: CMK
DRAWN BY: AMM
CHECKED BY: CMK

VILLAGE OF LOWELLVILLE
YOUNGSTOWN-LOWELLVILLE RD. STORM SEWER IMPROVEMENTS
VILLAGE OF LOWELLVILLE, OHIO

SURVEY CONTROL

PROJECT NO: 220549
DRAWING NAME: SUR-01
SHEET 10 OF 14

H:\2022\220549\DWG__SURVEY\V_220549-SURVEY_CONTROL.DWG – CONTROL – 7/25/2023 10:26:49 AM – ASHLEIGH MISCH

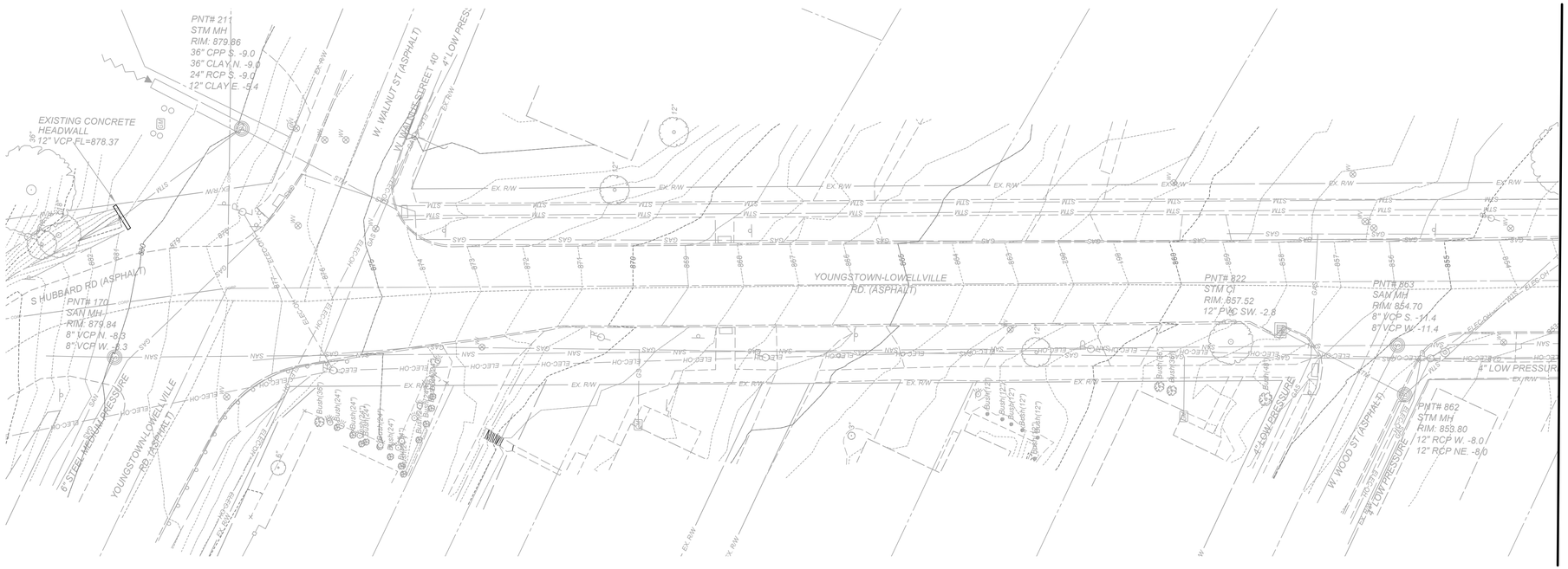

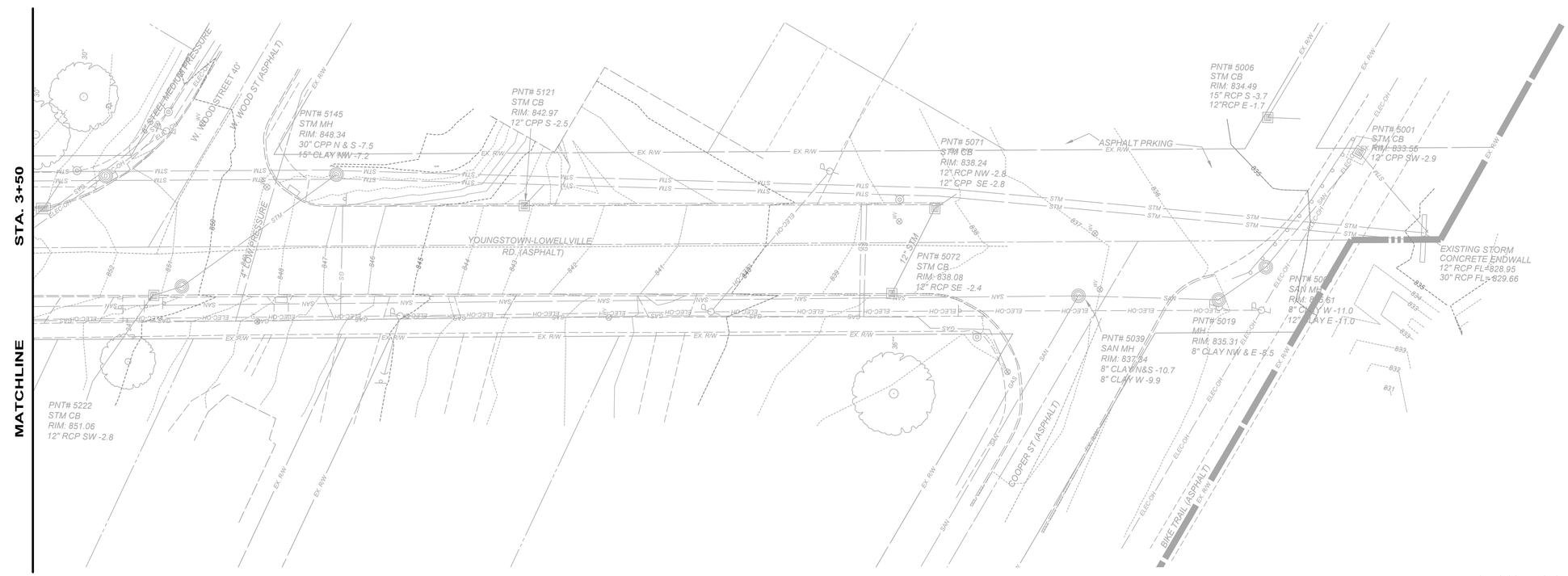

20' 0' 20
SCALE: 1" = 20

EXISTING CONDITIONS NOTES:

1. CONTRACTOR SHALL RECORD ALL EXISTING PAVEMENT STRIPING, MARKINGS, ETC. AND THEIR LOCATIONS IN ORDER TO RE-PAINT AFTER FINAL RESURFACING. PAVEMENT STRIPING NOT SHOWN N THESE PLANS FOR CLARITY OF UTILITY IMPROVEMENTS.

2. CONTRACTOR SHALL IDENTIFY ALL EXISTING CASTINGS WITHIN THE ROADWAY THAT WILL NEED TO BE RAISED/ADJUSTED TO GRADE PRIOR TO FINAL RESURFACING. CONTRACTOR SHALL MARK IDENTIFIED CASTINGS WITH FIELD PAINT.

STATE OF OHIO
CHRISTOPHER MICHAEL KOGELNIK
E-70064
REGISTERED
PROFESSIONAL ENGINEER

CT consultants
engineers • architects • planners
A Verdantas Company

NO	REVISION	DATE

SCALE: AS SHOWN
DATE: 08/01/2023
DESIGNED BY: CMK
DRAWN BY: AMM
CHECKED BY: CMK

VILLAGE OF LOWELLVILLE
YOUNGSTOWN-LOWELLVILLE RD. STORM SEWER IMPROVEMENTS
VILLAGE OF LOWELLVILLE, OHIO

EXISTING CONDITIONS

PROJECT NO: 220549
DRAWING NAME: EC-01
SHEET 11 OF 14

H:\2022\220549\DWG\SHEETS\C_220549 - EXISTING CONDITIONS.DWG - EC-01 - 8/1/2023 2:26:42 PM - ASHLEIGH MISCH

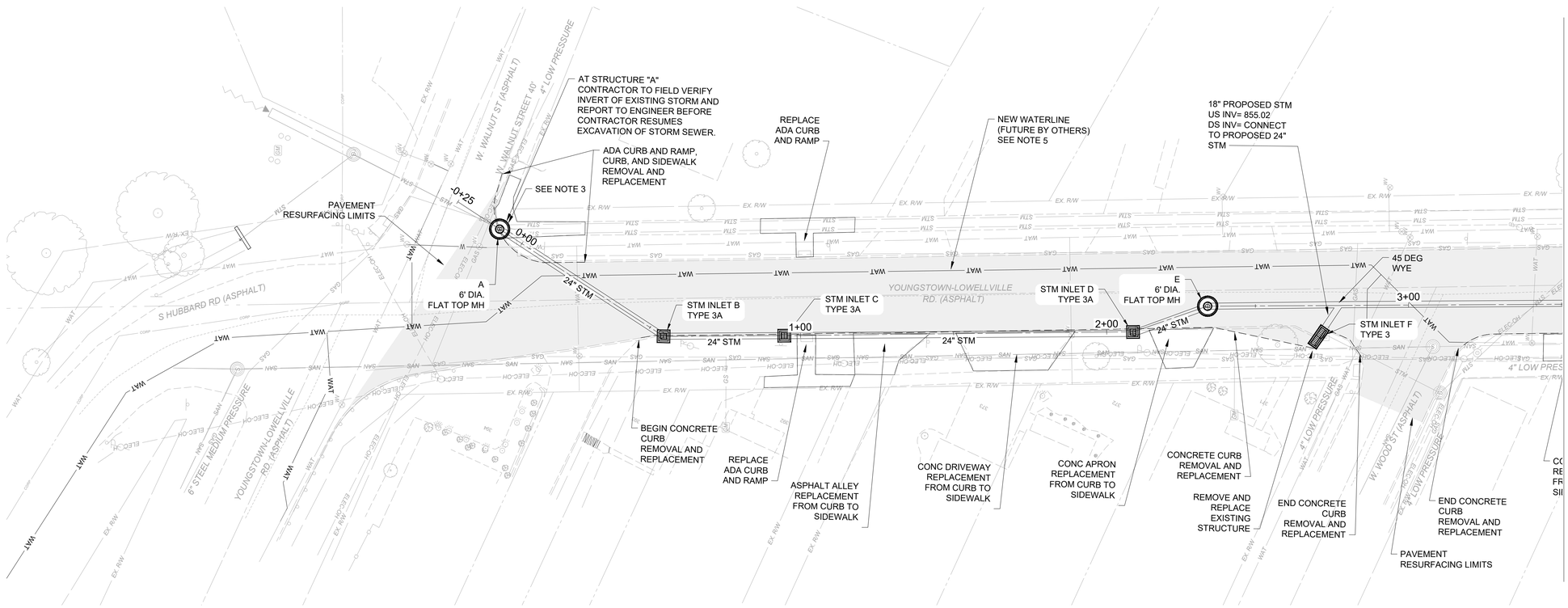

SCALE: 1" =20'

NOTE:

1. MAXIMUM WIDTH OF THE PAVEMENT (FOR PAYMENT) TO BE TO EXCAVATED FOR NEW STORM SEWER SHALL BE 6' WIDE CENTERED OVER NEW STORM SEWER.
2. EXISTING CURB IS ODOT TYPE 6. NEW CONCRETE CURBING SHALL BE ODOT TYPE 6.
3. CONTRACTOR TO CONFIRM DEPTH OF EXISTING GAS LINE PRIOR TO NEW STORM INSTALLATION. CONTRACTOR TO COORDINATE RE-ALIGNMENT OF EXISTING GAS LINE SERVICE LINES WITH GAS COMPANY. ALL COST FOR ANY RE-ALIGNMENT WILL BE RESPONSIBILITY OF THE CONTRACTOR.
4. CONTRACTOR TO CONFIRM DEPTH OF EXISTING WATERLINE PRIOR TO NEW STORM INSTALLATION. CONTRACTOR TO COORDINATE RE-ALIGNMENT OF EXISTING WATERLINE SERVICE LINES WITH AQUA. ALL COST FOR ANY RE-ALIGNMENT WILL BE RESPONSIBILITY OF THE CONTRACTOR.
5. CONTRACTOR IS RECOMMENDED TO OBTAIN AS-BUILT INFORMATION FROM AQUA (330) 397 - 0795 PRIOR TO BEGINNING CONSTRUCTION ON THE NEW STORM SEWER.
6. DOUBLE-WALL HDPE CONFORMING TO ASTM F2648, GASKET SHALL BE ASTM F477, FITTINGS SHALL CONFORM TO ASTM F2306. INSTALLATION SHALL CONFORM TO ASTM D 2321. ACCEPTABLE PRODUCT MANUFACTURES ARE ADS/HANCOR, OR LANE.

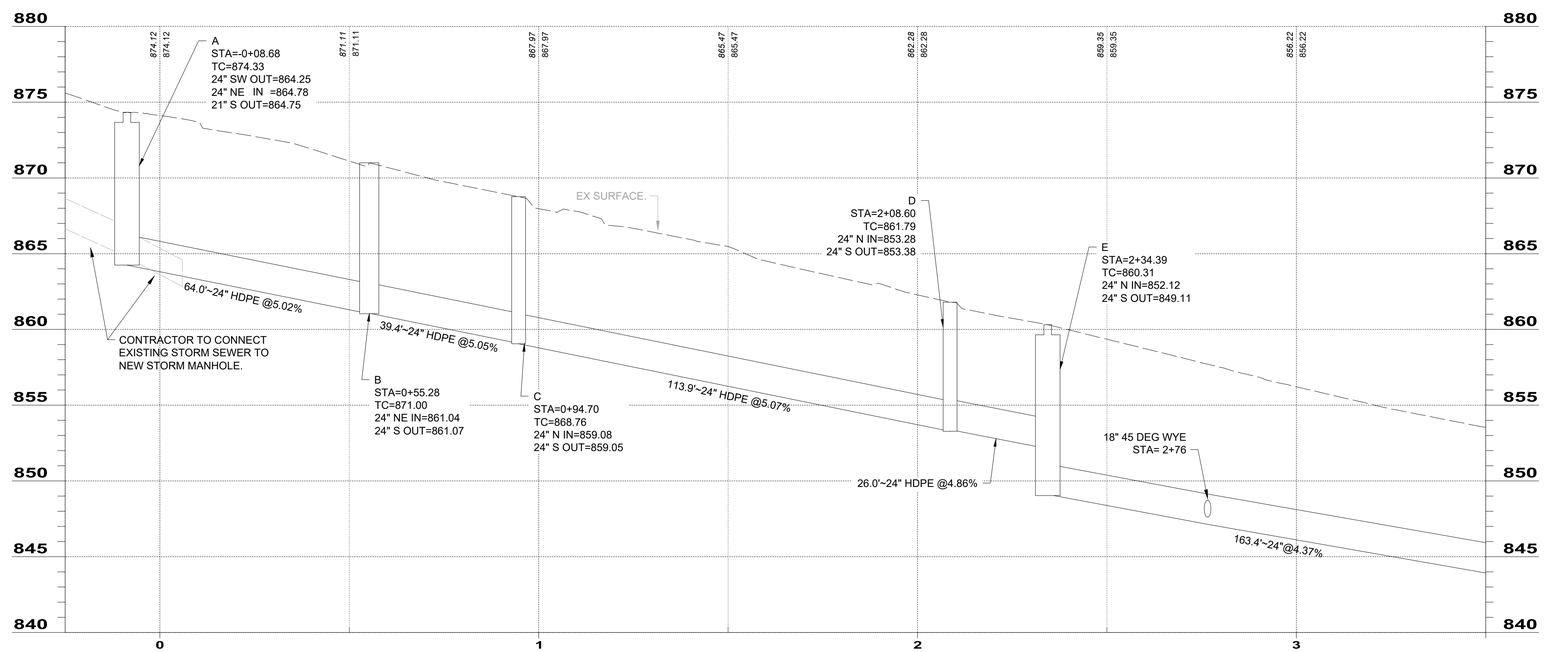

STA. 0+00 TO 3+50

STATE OF OHIO
CHRISTOPHER MICHAEL KOGELNIK
E-70064
REGISTERED
PROFESSIONAL ENGINEER

CT consultants
engineers • architects • planners
A Verdantas Company

NO	REVISION	DATE

SCALE: AS SHOWN
DATE: 08/01/2023
DESIGNED BY: CMK
DRAWN BY: AMM
CHECKED BY: CMK

VILLAGE OF LOWELLVILLE
YOUNGSTOWN-LOWELLVILLE RD. STORM SEWER IMPROVEMENTS
VILLAGE OF LOWELLVILLE, OHIO

PLAN AND PROFILE - 01

PROJECT NO: 220549
DRAWING NAME: PP-01
SHEET 12 OF 14

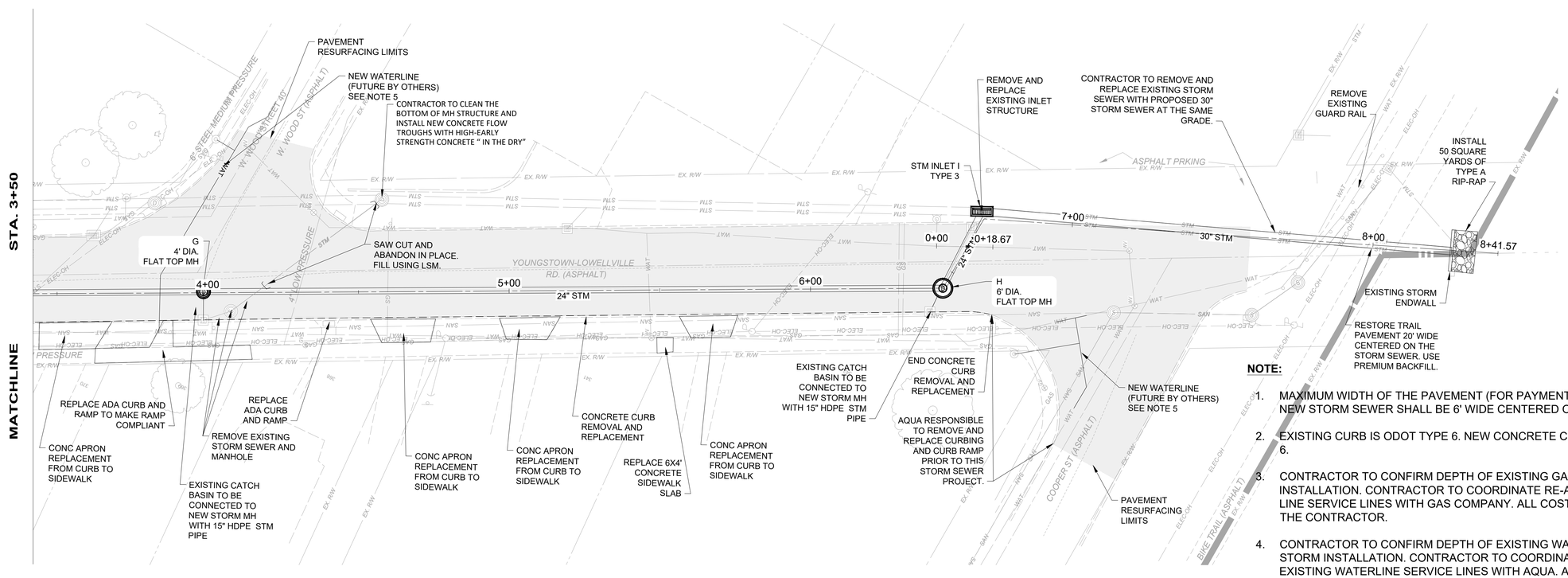

NOTE:

1. MAXIMUM WIDTH OF THE PAVEMENT (FOR PAYMENT) TO BE TO EXCAVATED FOR NEW STORM SEWER SHALL BE 6' WIDE CENTERED OVER NEW STORM SEWER.
2. EXISTING CURB IS ODOT TYPE 6. NEW CONCRETE CURBING SHALL BE ODOT TYPE 6.
3. CONTRACTOR TO CONFIRM DEPTH OF EXISTING GAS LINE PRIOR TO NEW STORM INSTALLATION. CONTRACTOR TO COORDINATE RE-ALIGNMENT OF EXISTING GAS LINE SERVICE LINES WITH GAS COMPANY. ALL COST WILL BE RESPONSIBILITY OF THE CONTRACTOR.
4. CONTRACTOR TO CONFIRM DEPTH OF EXISTING WATERLINE PRIOR TO NEW STORM INSTALLATION. CONTRACTOR TO COORDINATE RE-ALIGNMENT OF EXISTING WATERLINE SERVICE LINES WITH AQUA. ALL COST WILL BE RESPONSIBILITY OF THE CONTRACTOR.
5. CONTRACTOR IS RECOMMENDED TO OBTAIN AS-BUILT INFORMATION FROM AQUA (330) 397 - 0795 PRIOR TO BEGINNING CONSTRUCTION ON THE NEW STORM SEWER.
6. DOUBLE-WALL HDPE CONFORMING TO ASTM F2648, GASKET SHALL BE ASTM F477, FITTINGS SHALL CONFORM TO ASTM F2306. INSTALLATION SHALL CONFORM TO ASTM D 2321. ACCEPTABLE PRODUCT MANUFACTURES ARE ADS/HANCOR, OR LANE.

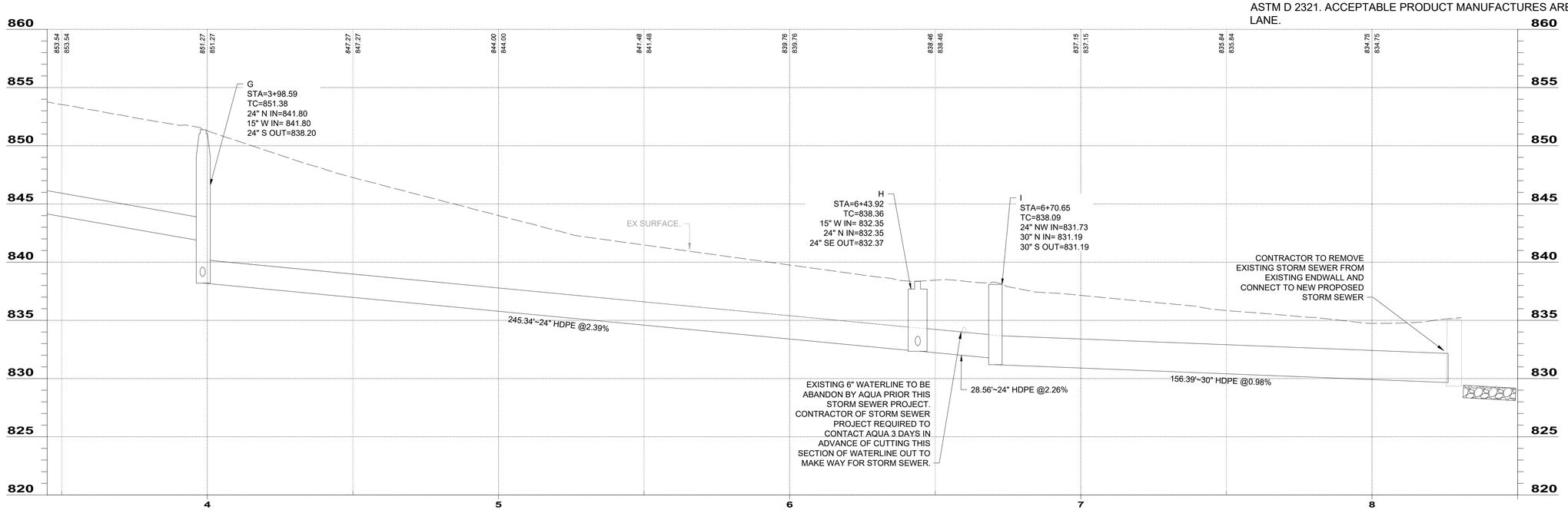

STA. 3+50 TO END

STATE OF OHIO
CHRISTOPHER MICHAEL KOGELNIK
E-70064
REGISTERED
PROFESSIONAL ENGINEER

CT consultants
engineers • architects • planners
A Verdantas Company

NO	REVISION	DATE

SCALE: AS SHOWN
DATE: 08/01/2023
DESIGNED BY: CMK
DRAWN BY: AMM
CHECKED BY: CMK

VILLAGE OF LOWELLVILLE
YOUNGSTOWN-LOWELLVILLE RD. STORM SEWER IMPROVEMENTS
VILLAGE OF LOWELLVILLE, OHIO

PLAN AND PROFILE - 02

PROJECT NO: 220549
DRAWING NAME: PP-02
SHEET 13 OF 14

SEEDING DATES	SPECIES	LB./ACRE	LB./1,000 SQ.FT.
MARCH 1 TO AUGUST 15	OATS TALL FESCUE ANNUAL RYEGRASS	128 (4 BUSHEL) 40 40	3 1 1
	PERENNIAL RYEGRASS TALL FESCUE ANNUAL RYEGRASS	40 40 40	1 1 1
	ANNUAL RYEGRASS PERENNIAL RYEGRASS CREEPING RED FESCUE KENTUCKY BLUEGRASS	55 142 17 17	1.25 3.25 0.4 0.4
	OATS TALL FESCUE ANNUAL RYEGRASS	128 (3 BUSHEL) 40 40	3 1 1
AUGUST 16TH TO NOVEMBER	RYE TALL FESCUE ANNUAL RYEGRASS	112 (2 BUSHEL) 40 40	3 1 1
	WHEAT TALL FESCUE ANNUAL RYEGRASS	120 (2 BUSHEL) 40 40	3 1 1
	PERENNIAL RYE TALL FESCUE ANNUAL RYEGRASS	40 40 40	1 1 1
	ANNUAL RYEGRASS PERENNIAL RYEGRASS CREEPING RED FESCUE KENTUCKY BLUEGRASS	40 40 40 40	1.25 3.25 0.4 0.4
NOVEMBER 1 TO FEBRUARY 29 USE MULCH ONLY OR DORMANT SEEDING			

TEMPORARY SEEDING CHART

SPECIES	LB./ACRE	LB./1,000 SQ. FT.	NOTES
GENERAL USE			
CREEPING RED FESCUE DOMESTIC RYEGRASS KENTUCKY BLUEGRASS	20 - 40 10 - 20 20 - 40	1/2 - 1 1/4 - 1/2 1/2 - 1	FOR CLOSE MOWING & FOR WATERWAYS WITH <2.0 FT/SEC VELOCITY
TALL FESCUE TURF-TYPE (DWARF) FESCUE	40 - 50 90	1 - 1-1/4 2-1/4	
STEEP BANKS OR CUT SLOPES			
TALL FESCUE	40 - 50	1 - 1-1/4	
CROWN VETCH TALL FESCUE	10 - 20 20 - 30	1/4 - 1/2 1/2 - 3/4	DO NOT SEED LATER THAN AUGUST
FLAT PEA TALL FESCUE	20 - 25 20 - 30	1/2 - 3/4 1/2 - 3/4	DO NOT SEED LATER THAN AUGUST
ROAD DITCHES AND SWALES			
TALL FESCUE	40 - 50	1 - 1-1/4	
TURF-TYPE (DWARF) FESCUE KENTUCKY BLUEGRASS	90 5	2-1/4 0.1	
LAWNS			
KENTUCKY BLUEGRASS PERENNIAL RYEGRASS	100 - 120 100 - 120	2 2	
KENTUCKY BLUEGRASS CREEPING RED FESCUE	100 - 120 100 - 120	2 1-1/2	FOR SHADED AREAS
NOTE: OTHER APPROVED SEED SPECIES MAY BE SUBSTITUTED			

PERMANENT SEEDING CHART

SEEDING CHARTS

NOT TO SCALE

RESTORATION/SEDIMENTATION AND EROSION CONTROL:

1. ALL AREAS DISTURBED BY CONSTRUCTION ACTIVITIES AND OTHER AREAS AS SHOWN ON PLANS SHALL BE PROPERLY RESTORED WITH 4" OF TOPSOIL, SEEDING AND MULCHING PER THE SPECIFICATIONS.
2. IN ALL DISTURBED AREAS THE CONTOURS WILL BE RESTORED IN A MANNER THAT MAINTAINS EXISTING DRAINAGE PATTERNS. FOLLOWED BY SEEDING AND MULCHING. IF, DUE TO WEATHER, FINAL GRADING CANNOT BE ACCOMPLISHED IMMEDIATELY, TEMPORARY SEEDING & MULCHING, WITHIN SEVEN DAYS, WILL BE USED UNTIL FINAL RESTORATION CAN OCCUR.
3. SILT FENCING SHALL BE EXTRA STRENGTH SYNTHETIC FILTER FABRIC HAVING A MINIMUM FLOW RATE OF 0.3 GA/SQ.FT/MINUTE AND SHALL CONTAIN ULTRAVIOLET RAY INHIBITORS AND STABILIZERS TO PROVIDE A MINIMUM OF 6 MONTHS OF EXPECTED USABLE CONSTRUCTION LIFE AT A TEMPERATURE RANGE OF 0°F. TO 120°F. SEE STANDARD DETAIL.
4. THE CONTRACTOR SHALL BE RESPONSIBLE FOR MAKING INSPECTIONS OF ALL EROSION CONTROL DEVICES ON A WEEKLY BASIS AND AFTER ALL STORMS THAT PRODUCE MORE THAN ONE-HALF (1/2") INCH TOTAL RAINFALL. ANY NEEDED REPAIRS SHALL BE PERFORMED IMMEDIATELY. THE CONTRACTOR SHALL DOCUMENT ALL INSPECTIONS AND ANY REPAIRS THAT ARE DONE TO MAINTAIN EFFICIENCY.
5. CONTRACTOR SHALL REMOVE DAILY ALL MUD, SOIL AND DEBRIS THAT MAY BE TRACKED ONTO EXISTING STREETS, DRIVES OR WALKS BY HIS EQUIPMENT OR THAT OF SUBCONTRACTORS OR SUPPLIERS.
6. THE TOTAL DISTURBED AREA IS LESS THAN ONE ACRE.

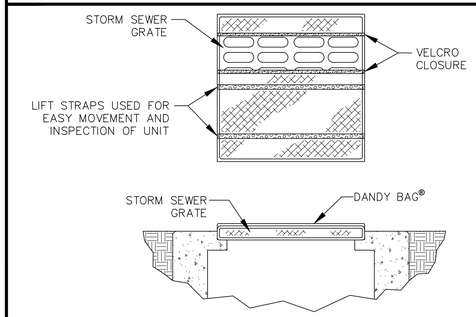

DANDY BAG (INLET PROTECTION ALTERNATE)

NOT TO SCALE

SILT FENCE NOTES:

1. SILT FENCE SHALL BE CONSTRUCTED BEFORE UPSLOPE LAND DISTURBANCE BEGINS.
2. ALL SILT FENCE SHALL BE PLACED AS CLOSE TO THE CONTOUR AS POSSIBLE SO THAT WATER WILL NOT CONCENTRATE AT LOW POINTS IN THE FENCE AND SO THAT SMALL SWALES OR DEPRESSIONS WHICH MAY CARRY SMALL CONCENTRATED FLOWS TO THE SILT FENCE ARE DISSIPATED ALONG ITS LENGTH.
3. TO PREVENT WATER PONDED BY THE SILT FENCE FROM FLOWING AROUND THE ENDS, EACH END SHALL BE CONSTRUCTED UPSLOPE SO THAT THE ENDS ARE AT A HIGHER ELEVATION.
4. WHERE POSSIBLE, SILT FENCE SHALL BE PLACED ON THE FLATTEST AREA AVAILABLE. WHERE POSSIBLE, VEGETATION SHALL BE PRESERVED FOR 5 FEET (OR AS MUCH AS POSSIBLE) UPSLOPE FROM THE SILT FENCE. IF VEGETATION IS REMOVED, IT SHALL BE REESTABLISHED WITHIN 7 DAYS FROM THE INSTALLATION OF THE SILT FENCE.
5. THE HEIGHT OF THE SILT FENCE SHALL BE A MINIMUM OF 16 INCHES ABOVE THE ORIGINAL GROUND SURFACE.
6. THE SILT FENCE SHALL BE PLACED IN A TRENCH CUT A MINIMUM OF 6 INCHES DEEP. THE TRENCH SHALL BE CUT WITH A TRENCHER, CABLE LAYING MACHINE, OR OTHER SUITABLE DEVICE WHICH WILL ENSURE AN ADEQUATELY UNIFORM TRENCH DEPTH.
7. THE SILT FENCE SHALL BE PLACED WITH THE STAKES ON THE DOWNSLOPE SIDE OF THE GEOTEXTILE AND SO THAT 8 INCHES OF CLOTH ARE BELOW THE GROUND SURFACE. EXCESS MATERIAL SHALL LAY ON THE BOTTOM OF THE 6-INCH-DEEP TRENCH. THE TRENCH SHALL BE BACKFILLED AND COMPACTED.
8. SEAMS BETWEEN SECTION OF SILT FENCE SHALL BE OVERLAPPED WITH THE END STAKES OF EACH SECTION WRAPPED TOGETHER BEFORE DRIVING INTO THE GROUND.
9. MAINTENANCE - SILT FENCE SHALL ALLOW RUNOFF TO PASS ONLY AS DIFFUSE FLOW THROUGH THE GEOTEXTILE. IF RUNOFF OVERTOPS THE SILT FENCE, FLOWS UNDER OR AROUND THE ENDS, OR IN ANY OTHER WAY BECOMES A CONCENTRATED FLOW, ONE OF THE FOLLOWING SHALL BE PERFORMED, AS APPROPRIATE:
   - 9.1. THE LAYOUT OF THE SILT FENCE SHALL BE CHANGED,
   - 9.2. ACCUMULATED SEDIMENT SHALL BE REMOVED, OR
   - 9.3. OTHER PRACTICES SHALL BE INSTALLED.
10. SILT FENCE MATERIALS
   - 10.1. FENCE POSTS - THE LENGTH SHALL BE A MINIMUM OF 32 INCHES LONG. WOOD POSTS WILL BE 2 X 2 INCH HARDWOOD OF SOUND QUALITY. THE MAXIMUM SPACING BETWEEN POSTS SHALL BE 10 FEET.
   - 10.2. SILT FENCE FABRIC (SEE CHART BELOW):

FABRIC PROPERTIES	VALUES	TEST METHOD
GRAB TENSILE STRENGTH	90 LB. MINIMUM	ASTM D 1682
MULLEN BURST STRENGTH	190 PSI MINIMUM	ASTM D 3786
SLURRY FLOW RATE	0.3 GAL./MIN./F2 MAXIMUM	
EQUIVALENT OPENING SIZE	40–80	US STD. SIEVE CW–02215
ULTRAVIOLET RADIATION STABILITY	90% MINIMUM	ASTM–G–26

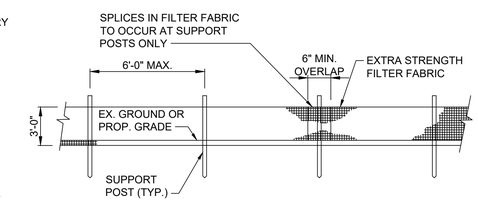

ELEVATION

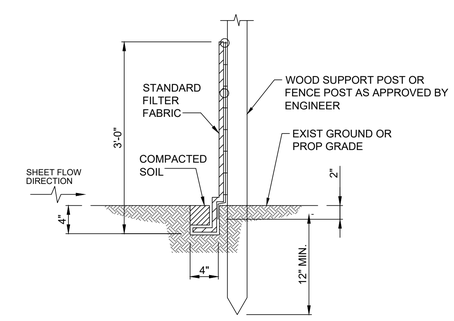

SECTION

SILT FENCE DETAIL

NOT TO SCALE

STATE OF OHIO
CHRISTOPHER MICHAEL KOGELNIK
E-70064
REGISTERED
PROFESSIONAL ENGINEER

CT consultants
engineers • architects • planners
A Verdantas Company

NO	REVISION	DATE

SCALE: AS SHOWN
DATE: 08/01/2023
DESIGNED BY: CMK
DRAWN BY: AMM
CHECKED BY: CMK

VILLAGE OF LOWELLVILLE
YOUNGSTOWN-LOWELLVILLE RD. STORM SEWER IMPROVEMENTS
VILLAGE OF LOWELLVILLE, OHIO

E&SC DETAILS - 01

PROJECT NO: 220549
DRAWING NAME: ESC-01
SHEET 14 OF 14