SOUTHGATE COMMUNITY CENTER
PARKING LOT RECONSTRUCTION
CITY OF SOUTHGATE
CAMBELL COUNTY, KENTUCKY

49435

CITY OF SOUTHGATE OFFICIALS

MAYOR
JIM HAMBERG

CITY CLERK
BRANDI BARTON

CITY COUNCIL MEMBERS
JACKSON CURRY
ELIZABETH HARTMAN
PAUL MELVILLE
MARK MESSMER
AILEEN OKURA
TOM WHITEHEAD

CITY ATTORNEY
MARY ANN STEWART

PUBLIC WORKS DIRECTOR
RICHMOND STORTZ

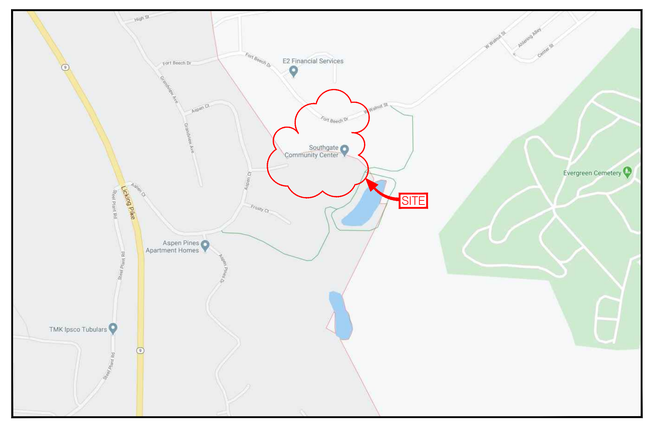

VICINITY MAP

K.T.C SPECIFICATIONS

THE LATEST STANDARD SPECIFICATIONS OF THE KENTUCKY TRANSPORTATION CABINET, INCLUDING CHANGES AND SUPPLEMENTAL SPECIFICATIONS THERETO AND CAMPBELL COUNTY SUBDIVISION REGULATION REQUIREMENTS SHALL GOVERN THIS IMPROVEMENT.

SOURCE OF BOUNDARY AND TOPOGRAPHIC INFORMATION

THE TOPOGRAPHIC INFORMATION SHOWN ON THESE PLANS IS BASED UPON A FIELD SURVEY BY VERDANTAS. THE BOUNDARY INFORMATION SHOWN ON THESE PLANS IS BASED UPON PLANNING AND DEVELOPMENT SERVICES (P.D.S) G.I.S. MAPPING AND DOES NOT REPRESENT AN ACTUAL FIELD BOUNDARY SURVEY BY VERDANTAS.

2 Business Days Before You Dig
Kentucky 811
Always Call 811 or 1-800-752-6007 Before you Dig
www.kentucky811.org

INDEX OF SHEETS

TITLE SHEET ---------- 1
NOTES AND LEGEND SHEET ---------- 2
DETAIL SHEET ---------- 3
SITE LAYOUT SHEET ---------- 4
STORMWATER POLLUTION PREVENTION ---------- 5

verdantas
300 BUTTERMILK PIKE, SUITE 332
FORT MITCHELL, KENTUCKY 41017
TEL. (859) 525-0544
WWW.VERDANTAS.COM

NO	REVISION	DATE
-		

ISSUED FOR: BIDDING
ISSUE DATE: 07/30/26
SCALE: AS NOTED
DESIGNED BY: DGAR
DRAWN BY: DGAR
CHECKED BY: JSHU

SOUTHGATE COMMUNITY CENTER
PARKING LOT RECONSTRUCTION
CITY OF SOUTHGATE
CAMPBELL COUNTY, KENTUCKY

TITLE SHEET

PROJECT NO. 49435
DISCIPLINE CIVIL
SHEET NAME C1
SHEET 1 OF 5

GENERAL NOTES

1. ALL CONSTRUCTION SHALL CONFORM TO THESE PLANS AND SPECIFICATIONS, THE LATEST EDITION OF THE CAMPBELL COUNTY SUBDIVISION REGULATIONS AND THE KENTUCKY DEPARTMENT OF HIGHWAYS STANDARD SPECIFICATIONS FOR ROAD AND BRIDGE CONSTRUCTION.
2. THERE SHALL BE NO DEVIATION FROM THE APPROVED PLANS WITHOUT PRIOR WRITTEN APPROVAL FROM THE OWNER OR THEIR REPRESENTATIVE. ANY DEVIATION FROM THESE PLANS WITHOUT PRIOR WRITTEN APPROVAL SHALL BE AT THE CONTRACTOR'S RISK AND EXPENSE.
3. THE CONTRACTOR SHALL OBTAIN THE SERVICES OF A TESTING AGENCY FOR ALL REQUIRED TESTING.
4. THE CONTRACTOR SHALL BE RESPONSIBLE FOR ALL CONSTRUCTION LAYOUT STAKING INCLUDING HORIZONTAL AND VERTICAL CONTROL. ANY DISCREPANCIES DISCOVERED IN THE PLAN INFORMATION, OR BETWEEN THE PLAN AND ELECTRONIC DATA SHALL BE BROUGHT TO THE IMMEDIATE ATTENTION OF THE DESIGN ENGINEER SO THE APPROPRIATE ADJUSTMENTS MAY BE MADE.
5. ALL WORK SHALL BE LIMITED TO THE PROPERTIES AND EASEMENTS IDENTIFIED ON THE PLANS. ANY WORK WITHIN THE PUBLIC RIGHT OF WAY IS SUBJECT TO INSPECTIONS AND ENCROACHMENT PERMITS FROM THE JURISDICTION HAVING AUTHORITY OVER THE RIGHT-OF-WAY. REQUIREMENTS OF SUCH PERMITS ARE INCORPORATED INTO THESE DOCUMENTS BY REFERENCE.
6. ANY DEFECTS IN CONSTRUCTION, INCLUDING MATERIALS OR WORKMANSHIP, SHALL BE REPLACED OR CORRECTED BY THE CONTRACTOR BY REMOVAL AND REPLACEMENT OR OTHER APPROVED METHODS PRIOR TO ACCEPTANCE BY THE OWNER WITH NO ADDITIONAL COMPENSATION.
7. CONTRACTOR SHALL SUBMIT A PLAN OF OPERATIONS FOR REVIEW AND APPROVAL BY THE ARCHITECT THAT WILL INDICATE EQUIPMENT STAGING AREAS, STOCKPILE LOCATION AND SANITATION FACILITIES.
8. RIGHT-OF-WAY AND PROPERTY LINES SHOWN ARE PLOTTED FROM CAMMPBELL COUNTY G.I.S. MAPPING AND ARE APPROXIMATE AND NOT THE RESULT OF A FIELD BOUNDARY SURVEY.
9. ALL OSHA, STATE AND LOCAL SAFETY REGULATIONS SHALL BE FOLLOWED DURING CONSTRUCTION.
11. NO CONSTRUCTION SHALL COMMENCE UNTIL ALL CAMPBELL COUNTY AND THE CITY OF SOUTHGATE PERMITS HAVE BEEN ISSUED AS REQUIRE
12. APPROPRIATE BARRICADES, WARNING LIGHTS, SIGNS, FENCING ETC. SHALL BE ERECTED AROUND THE CONSTRUCTION AREA DURING NON-WORKING HOURS TO ALERT PERSONS OF THE POTENTIAL DANGER ASSOCIATED WITH THE AREA UNDER CONSTRUCTION AS WELL AS TO PREVENT ACCESS BY UNAUTHORIZED PERSONNEL. THE CONTRACTOR IS RESPONSIBLE FOR ENSURING THE SAFETY OF THE GENERAL PUBLIC AS WELL AS ALL CONSTRUCTION PERSONNEL.
13. ANY EXISTING ROADWAY, LAWN, CURB, SIDEWALK OR OTHER APPURTENANCE DISTURBED DURING CONSTRUCTION NOT DESIGNATED FOR REMOVAL OR REPLACEMENT SHALL BE RESTORED BY THE CONTRACTOR WITHOUT ADDITIONAL COMPENSATION TO A CONDITION EQUAL TO OR BETTER THAN THAT WHICH EXISTED PRIOR TO DISTURBANCE.
14. ANY TEMPORARY UTILITY REQUIRED BY THE CONTRACTOR (ELECTRIC, WATER ETC.) SHALL BE AT THE SOLE EXPENSE OF THE CONTRACTOR.
15. THE CONTRACTOR SHALL PRESERVE ALL BENCHMARKS, PROPERTY LINE REFERENCES, REFERENCE POINTS, STAKES AND ANY OTHER SURVEY REFERENCE. IN CASE OF DISTURBANCE THE CONTRACTOR SHALL REPLACE THEM AT THE CONTRACTOR'S EXPENSE, BE RESPONSIBLE FOR ANY ERRORS THAT MAY BE CAUSED BY THEIR LOSS OR DISTURBANCE.
16. ALL PROPOSED CONCRETE PAVEMENT ABUTTING EXISTING PAVEMENT SHALL BE DOWELED INTO EXISTING CONCRETE PAVEMENT USING A $\frac{3}{4}$" DEFORMED DOWEL WITH 9" MINIMUM EMBEDMENT.
17. THE CONTRACTOR SHALL COMPLY AT ALL TIMES WITH APPLICABLE FEDERAL, STATE AND LOCAL LAWS, PROVISIONS, AND POLICIES GOVERNING SAFETY AND HEALTH, INCLUDING THE FEDERAL CONSTRUCTION SAFETY ACT (PUBLIC LAW 91-54), FEDERAL REGISTER, CHAPTER XVII, PART 1926 OF TITLE 29 REGULATIONS, OCCUPATIONAL SAFETY AND HEALTH REGULATIONS FOR CONSTRUCTION, AND SUBSEQUENT PUBLICATIONS UPDATING THESE REGULATIONS.
18. THE CONTRACTOR SHALL BE RESPONSIBLE FOR EXAMINING THE AREAS AND CONDITIONS UNDER WHICH THE PROJECT IS TO BE CONSTRUCTED PRIOR TO THE SUBMISSION OF THE BID. SUBMISSION OF A BID SHALL BE CONSTRUED TO MEAN THE CONTRACTOR HAS REVIEWED THE SITE AND IS FAMILIAR WITH THE CONDITIONS AND CONSTRAINTS OF THE SITE.
19. CONTRACTOR SHALL REFER TO OTHER PLANS WITHIN THIS CONSTRUCTION SET FOR OTHER PERTINENT INFORMATION.

ACCESSIBILITY NOTES

1. ALL REQUIREMENTS OF THE AMERICANS WITH DISABILITIES ACT (ADA) SHALL BE FOLLOWED IN ALL ASPECTS OF THE PROJECT.
2. ALL SIDEWALKS INSTALLED SHALL HAVE A MAXIMUM CROSS SLOPE OF 2%
3. HANDICAP ACCESSIBLE PARKING SPACES SHALL NOT EXCEED A SLOPE OF 2% IN ANY DIRECTION
4. ALL CURB RAMPS SHOWN ALONG A DESIGNATED ACCESSIBLE ROUTE SHALL BE FLUSH WITH THE ADJACENT PAVEMENT.

UTILITY NOTES

1. THIS PLAN SHOWS THE APPROXIMATE LOCATION OF UNDERGROUND UTILITIES (GAS, WATER, STORM SEWER, SANITARY SEWER, TELEPHONE, ELECTRIC, ETC.). THE PREPARER DOES NOT GUARANTEE THEIR ACCURACY OR CORRECTNESS. THE INFORMATION PROVIDED SHALL BE FIELD VERIFIED PRIOR TO CONSTRUCTION. THE CONTRACTOR SHALL BE RESPONSIBLE FOR MAINTAINING THE UTILITY AS WELL AS THE SERVICE LATERALS AT ALL TIMES DURING CONSTRUCTION. THE CONTRACTOR SHALL PRACTICE CARE DURING THE GRADING AND TRENCH EXCAVATION AND SHALL BE RESPONSIBLE FOR REPLACING ANY SERVICES THAT ARE DAMAGED DURING CONSTRUCTION AT THEIR EXPENSE.
2. PRIOR TO ANY EXCAVATION OVER AN EXISTING UTILITY LINE OR SERVICE, CONTRACTOR SHALL HAND EXCAVATE TO EXPOSE THE UTILITY AND DETERMINE LOCATION AND DEPTH. NOTIFY ENGINEER IMMEDIATELY OF ANY CONFLICTS.
3. TOPS OF EXISTING AND PROPOSED CASTING ELEVATIONS ARE SUBJECT TO FINAL ADJUSTMENTS AS APPROVED BY THE ENGINEER AND REQUIREMENTS OF UTILITY OWNER. THIS WORK WILL BE INCIDENTAL TO THE CONTRACT.
4. FORTY-EIGHT (48) HOURS BEFORE EXCAVATION IS TO COMMENCE, THE CONTRACTOR SHALL NOTIFY THE FOLLOWING AGENCIES: THE KENTUCKY UTILITY PROTECTION SERVICE AND ALL OTHER UTILITIES THAT MAY HAVE UNDERGROUND UTILITIES INVOLVING THIS PROJECT AND ARE NON-MEMBERS OF KENTUCKY UNDERGROUND PROTECTION.
5. THE SITE MAY CONTAIN EXISTING PRIVATELY OWNED UTILITIES. THESE HAVE BEEN SHOWN AS ACCURATELY AS POSSIBLE BASED ON EXISTING UTILITY INFORMATION, BUT THE PREPARER OF THESE DOCUMENTS DOES NOT ATTEST TO THEIR ACCURACY OR CORRECTNESS. IT SHALL BE THE CONTRACTOR'S RESPONSIBILITY TO CONTRACT WITH A PRIVATE UTILITY MARKING AGENCY TO IDENTIFY AND LOCATE ALL PRIVATE UTILITIES WITHIN THE WORK SITE. THIS MAY INVOLVE THE EXCAVATION AND UNCOVERING OF UTILITIES TO VERIFY LOCATION. NOTIFY ENGINEER IMMEDIATELY OF ANY CONFLICTS. CONTRACT SHALL MAKE RECORDS OF ALL PRIVATE UTILITIES ENCOUNTERED DURING THE PROJECT.
6. RECORD DRAWINGS OF NEW UTILITY SERVICES SHALL BE PREPARED BY THE CONTRACTOR AND SUBMITTED TO THE OWNER UPON COMPLETION OF THE PROJECT.

STORM & SANITARY NOTES

1. ALL STORM AND SANITARY ITEMS SHALL BE IN ACCORDANCE WITH THE LATEST SPECIFICATIONS AND DETAILS FROM SD1. CONCRETE AND METAL PIPE MATERIALS SHALL NOT BE USED UNLESS OTHERWISE SPECIFIED ON THESE PLANS.
2. CONTRACTOR SHALL BE REQUIRED TO MAINTAIN STORM AND SANITARY SEWER FLOW THROUGHOUT THE PROJECT, FOR THE DURATION OF CONSTRUCTION. ALL COST FOR THE ABOVE SHALL BE INCIDENTAL TO THE CONTRACT.
3. IF REQUIRED, CONTRACTOR SHALL BE RESPONSIBLE FOR CONTACTING AND SCHEDULING STORM AND SANITARY SEWER INSPECTIONS AS SET OUT IN THE PRECONSTRUCTION MEETING.
4. CONNECTIONS INTO EXISTING OR PROPOSED STORM OR SANITARY SEWER STRUCTURES OR PIPES SHALL BE COMPLETED BY A CERTIFIED TAPPER BY SD1.
5. DOWNSPOUT AND UNDERDRAIN CONSTRUCTION SHALL MEET THESE AND THE LATEST SPECIFICATION OF THE CAMPBELL COUNTY SUBDIVISION REGULATIONS, SD-1 REGULATIONS AND STANDARD DRAWINGS, AND DETAILS SHOWN ON THIS PLAN. BEDDING, BACKFILLING, JOINTS, EXCAVATION AND INSTALLATION SHALL BE INCLUDED IN THE COST PER FOOT OF PIPE. STORM SEWER, DOWNSPOUT AND UNDERDRAIN PIPE MATERIAL SHALL HAVE A MANNING'S "N" VALUE OF 0.013 OR LESS (UNLESS OTHERWISE SHOWN) AND BE RIGID / SMOOTH INTERIOR WALLED PVC SDR-35 PIPE, RIBBED PVC PIPE, A-2000 PVC PIPE, UNLESS OTHERWISE SHOWN.
6. ROOF DRAINS, FOUNDATION DRAINS AND OTHER CLEAN WATER CONNECTIONS TO THE SANITARY SEWER SYSTEM ARE PROHIBITED.
7. CONTRACTOR TO PROVIDE SHOP DRAWINGS ON ALL STORM SEWER MANHOLES, INLETS AND DETENTION SYSTEMS.
8. CONTRACTOR SHALL ASSURE THAT THERE IS POSITIVE DRAINAGE TO THE INLETS UPON PLACEMENT OF NEW PAVEMENT

WATER NOTES

1. ALL WORK RELATING TO WATER MAINS OR WATER SERVICE LINES SHALL BE COMPLETED IN ACCORDANCE WITH THE RULES AND REGULATIONS OF THE NORTHERN KENTUCKY WATER DISTRICT (NKWD).
2. CONTRACTOR MAY NOT USE WATER FROM FIRE HYDRANTS WITHOUT PRIOR PERMISSION FROM NKWD
3. MAINTAIN A MINIMUM 10' HORIZONTAL SEPARATION AND 18" VERTICAL SEPARATION FROM ALL SANITARY SEWERS.

GAS NOTES

1. ALL WORK RELATING TO GAS MAINS OR GAS SERVICE LINES SHALL BE COMPLETED IN ACCORDANCE WITH THE RULES AND REGULATIONS OF THE DUKE ENERGY

ELECTRIC NOTES

1. ALL WORK RELATING TO ELECTRIC LINES SHALL BE COMPLETED IN ACCORDANCE WITH THE RULES AND REGULATIONS OF THE DUKE ENERGY

MAINTENANCE OF TRAFFIC NOTES

1. ALL MAINTENANCE OF TRAFFIC PROCEDURES SHALL MEET THE REQUIREMENT OF THE MANUAL OF UNIFORM TRAFFIC CONTROL DEVICES AND SECTION 112 OF KTC STANDARD SPECIFICATIONS. THE CONTRACTOR SHALL MAINTAIN ACCESS TO LOCAL TRAFFIC (ACCESS TO RESIDENCES WITHIN CONSTRUCTION LIMITS) AT ALL TIMES. THE CONTRACTOR SHALL PROVIDE SUFFICIENT SIGN, WARNING LIGHTS, BARRICADES, OR OTHER NECESSARY DEVICES MAKE THE SITE SAFE TO THE TRAVELING PUBLIC.
2. IT SHALL BE THE CONTRACTOR'S RESPONSIBILITY TO SUBMIT TO THE ENGINEER AND THE OWNER A TRAFFIC CONTROL PLAN FOR THIS PROJECT.
3. PRIOR TO ANY CONSTRUCTION, THE CONTRACTOR SHALL NOTIFY THE CITY OF SOUTHGATE AND THE SOUTHGATE POLICE DEPARTMENT. AT ALL TIMES, EMERGENCY VEHICLES SHALL BE GIVEN ACCESS.
4. RESIDENTS OF THE PROJECT AREA SHALL BE ALLOWED ACCESS TO THEIR PROPERTY AT ALL TIMES.
5. ALTERNATE ROUTES OR CONTINUOUS TRAFFIC CONTROL SHALL BE EMPLOYED WHEN A PUBLIC WAY IS TEMPORARY BLOCKED DURING CONSTRUCTION, INCLUDING PEDESTRIAN AND BICYCLE FACILITIES. ADVANCED NOTICE SIGNS IN ACCORDANCE WITH THE MUTCD SHALL BE EMPLOYED.

GRADING AND EROSION CONTROL NOTES

1. ALL DISTURBED AREAS ARE TO BE RESTORED (SEEDED AND MULCHED) BY THE CONTRACTOR AND SHALL PROCEED WITH JOB PROGRESSION. THE CONTRACTOR SHALL ALSO BE RESPONSIBLE FOR REMOVING ANY EXCESS MATERIALS AT THE SITE AND MAINTAINING ALL SEEDED AND MULCHED AREAS UNTIL PROJECT COMPLETION AND FINAL INSPECTION PER KDOT SPEC. 212. ALL DISTURBED AREAS SHALL BE RESTORED WITHIN TWENTY-ONE (21) DAYS AFTER CONSTRUCTION.
2. ALL APPLICABLE RECOMMENDATIONS IN KENTUCKY'S BEST MANAGEMENT PRACTICES MANUAL SHALL BE FOLLOWED BY THE CONTRACTOR, INCLUDING SEEDING OF DISTURBED GROUND.
3. ADDITIONAL BMP'S AND EROSION AND SEDIMENT CONTROL MEASURES MAY BE REQUIRED AS DEEMED NECESSARY. ALL COST FOR ABOVE SHALL BE INCLUDED IN LUMP SUM BID FOR EROSION CONTROL AND WATER POLLUTION CONTROL.
4. ALL EXCAVATION IS CONSIDERED UNCLASSIFIED AND THE CONTRACTOR SHALL BE RESPONSIBLE FOR MEANS, METHODS AND MATERIALS OF CONSTRUCTION. THE DESIGN ENGINEER SHALL NOT BE RESPONSIBLE FOR THE SUITABILITY OF MATERIAL UNDERLYING THE PROJECT SITE. THE CONTRACTOR SHALL PERFORM ANY INVESTIGATIONS OR TESTING NECESSARY TO ADEQUATELY DETERMINE OR ESTIMATE TO THEIR SATISFACTION ANY EXISTING SITE CONDITION WHICH COULD AFFECT HIS BID OR THE PERFORMANCE OF THE PROPOSED IMPROVEMENTS. THIS COULD INCLUDE, BUT NOT BE LIMITED TO, UNSUITABLE OR UNSTABLE SOIL/SUBSURFACE CONDITIONS, ROCK, WATER (PERCHED OR FREE), OBSTRUCTIONS ETC.
5. ALL TREES AND OTHER VEGETATION WITHIN THE PROJECT LIMITS THAT INTERFERE WITH CONSTRUCTION SHALL BE REMOVED, INCLUDED STUMP REMOVAL.
6. THE CONTRACTOR SHALL REMOVE ALL SURPLUS DEMOLISHED AND WASTE MATERIALS, INCLUDING TREES, STUMPS, TRASH AND DEBRIS, FROM THE PROJECT LIMITS AND DISPOSE OF OFF-SITE. IN NO INSTANCE SHALL MATERIAL BE BURIED ON-SITE.
7. THE CONTRACTOR SHALL REMOVE FROM THE SITE ALL MATERIAL DEEMED UNSUITABLE FOR EMBANKMENT BY THE OWNER'S REPRESENTATIVE AND BE DISPOSED OF OFF-SITE.
8. THE CONTRACTOR SHALL PROVIDE FINAL GRADING TO WITHIN 1" OF GRADES SHOWN ON THE PLANS.
9. TOPSOIL SHALL BE STRIPPED AND SOCKPILED FROM ALL AREAS TO BE GRADED, TO WHATEVER DEPTH ENCOUNTERED, AND IN A MANNER TO PREVENT INTERMINGLING WITH UNDERLYING SUBSOIL. SOILD SHALL NOT BE STOCKPILED NEAR THE EDGE OF EXCAVATIONS OR WITHIN DRIP LINES OF TREES TO REMAIN.
10. EXCESS SOIL GENERATED FROM TRENCH EXCAVATIONS SHALL BE INCORPORATED IN THE UNIT PRICE BID FOR EXCAVATION INCLUDING EMBANKMENT CONSTRUCTION. ANY EXCESS SOIL UNABLE TO BE PLACED ON-SITE OR DEEMED UNSUITABLE FOR EMBANKMENT BY THE ENGINEER SHALL BE DISPOSED OF OFF-SITE.
11. THE CONTRACTOR SHALL FOLLOW THE RECOMMENDATIONS IN THE SUBSURFACE EXPLORATION AND GEOTECHNICAL ENGINEERING REPORT FOR EXCAVATION AND EMBANKMENT TO CONSTRUCT THE IMPROVEMENTS AND ACHIEVE THE FINISHED GRADES SHOWN ON THE PLANS. (IF AVAILABLE)
12. NO SLAG, RIVER GRAVEL, RECYCLED PORTLAND CEMENT CONCRETE, RECLAIMED ASPHALT CONCRETE PAVEMENT OR RECLAIMED BITUMINOUS AGGREGATE BASE SHALL BE USED AS FILL.
13. EXPOSED PAVEMENT SUBGRADE AREAS SHALL BE MAINTAINED IN CONDITIONS TO PREVENT PONDING OF WATER AFTER RAINS.
14. ALL EXISTING AND PROPOSED MANHOLE COVERS, VALVE BOXES, ETC. LOCATED WITHIN PEDESTRIAN ACCESS SHALL BE FLUSH MOUNTED WITH THE WALKING SURFACE.
15. SLOPE ALL PAVING AND LANDSCAPE AREAS AWAY FROM THE BUILDING AT A MINIMUM OF 1%
16. THE ENGINEER MAKES NO REPRESENTATION AS TO A BALANCED EARTHWORK SITE. THE CONTRACTOR SHALL BE RESPONSIBLE FOR PROVIDING THE FINAL SITE GRADES AS INDICATED ON THE GRADING PLAN, INCLUDING THE IMPORT OR EXPORT OF MATERIAL IF REQUIRED TO ACHIEVE THE PROPOSED GRADES. ADDITIONALLY, THE CONTRACTOR SHALL BE RESPONSIBLE FOR THE PROPER REMOVAL AND DISPOSAL OF ALL SURPLUS EARTHWORK, DEBRIS OR WASTE FROM THE SITE. ALL COST FOR THE ABOVE SHALL BE INCLUDED IN THE CONTRACTORS BID PRICE FOR EXCAVATION AND/OR EMBANKMENT.
17. THE CONTRACTOR SHALL PROTECT STRUCTURES, UTILITIES, SIDEWALKS, PAVEMENTS AND OTHER FACILITIES TO REMAIN FROM DAMAGE CAUSED BY EARTHWORK OPERATIONS.
18. MAINTENANCE OF ALL TEMPORARY AND PERMANENT EROSION AND SEDIMENT CONTROL FACILITIES IS THE RESPONSIBILITY OF THE CONTRACTOR(S)
19. CONTRACTOR SHALL PROVIDE WRITTEN DOCUMENTATION OF REPAIR AND/OR REPLACEMENT OF BMP'S

EROSION CONTROL LEGEND

- IP — INLET PROTECTION (SEE DETAIL)
- CD — CHECK DAM
- CE — CONSTRUCTION ENTRANCE
- WA — CONCRETE WASHOUT
- RCP — ROCK CHANNEL PROTECTION
- SF — PROPOSED SILT FENCE

HATCH LEGEND

- PROPOSED ASPHALT PAVEMENT REPLACEMENT WITH GRANULAR BASE - SEE DETAIL
- PROPOSED ASPHALT RESEAL AND RESTRIPING
- CONCRETE CHANNEL - SEE DETAIL SHEET

SYMBOL LEGEND

GAS	EXISTING GAS LINE
GS	EXISTING GAS SERVICE
ELEC-UG / ELEC-OH	EXISTING ELECTRIC (UNDERGROUND / OVERHEAD)
CATV-UG / CATV-OH	EXISTING CABLE (UNDERGROUND / OVERHEAD)
TEL-UG / TEL-OH	EXISTING TELEPHONE (UNDERGROUND / OVERHEAD)
WAT	EXISTING WATER MAIN
WS	EXISTING WATER SERVICE
STM	EXISTING STORM SEWER
RD	EXISTING ROOF DRAIN
SAN	EXISTING SANITARY SEWER
FM	EXISTING SANITARY FORCE MAIN
FOC	EXISTING FIBER OPTICS
X	EXISTING FENCE
650	EXISTING CONTOURS (MAJOR)
648	EXISTING CONTOURS (MINOR)
EX R/W	EXISTING RIGHT OF WAY
	EXISTING PROPERTY LINE
	EXISTING EASEMENT
	EXISTING GUARDRAIL
	EXISTING TREE LINE
GAS	PROPOSED GAS LINE
GS	PROPOSED GAS SERVICE
ELEC-UG / ELEC-OH	EXISTING ELECTRIC (UNDERGROUND / OVERHEAD)
CATV-UG / CATV-OH	PROPOSED CABLE (UNDERGROUND / OVERHEAD)
TEL-UG / TEL-OH	PROPOSED TELEPHONE (UNDERGROUND / OVERHEAD)
	PROPOSED WATER MAIN
WS	PROPOSED WATER SERVICE
	PROPOSED STORM SEWER
UD	PROPOSED UNDERDRAIN
UD/DSC	PROPOSED UNDERDRAIN / DOWNSPOUT COLLECTOR COMBO
	PROPOSED SANITARY SEWER
FM	PROPOSED SANITARY FORCE MAIN
FOC	PROPOSED FIBER OPTICS
X	PROPOSED FENCE
650	PROPOSED CONTOURS (MAJOR)
648	PROPOSED CONTOURS (MINOR)
	PROPOSED RIGHT OF WAY
	PROPOSED PROPERTY LINE
	PROPOSED EASEMENT
	PROPOSED GUARDRAIL
	PROPOSED TREE LINE / CLEARING LIMITS
	PROPOSED DISTURBED LIMITS
EXISTING FLAGPOLE	PROPOSED FLAGPOLE
EXISTING MAILBOX	PROPOSED MAILBOX
EXISTING SIGN	PROPOSED SIGN
EXISTING CABLE PEDESTAL	PROPOSED CABLE PEDESTAL
EXISTING ELECTRIC PEDESTAL	PROPOSED ELECTRIC PEDESTAL
EXISTING PULL BOX	PROPOSED PULL BOX
EXISTING GROUND LIGHT	PROPOSED GROUND LIGHT
EXISTING LIGHT POLE	PROPOSED LIGHT POLE
EXISTING ELECTRIC METER	PROPOSED ELECTRIC METER
EXISTING ELECTRIC MANHOLE	PRPOSED ELECTRIC MANHOLE
EXISTING GAS METER	PROPOSED GAS METER
GV EXISTING GAS VALVE	GV PROPOSED GAS VALVE
EXISTING GAS BOX	PROPOSED GAS BOX
EXISTING UTILITY POLE	PROPOSED UTILITY POLE
EXISTING GUY WIRE / ANCHOR	PROPOSED GUY WIRE / ANCHOR
EXISTING SANITARY MANHOLE	PROPOSED SANITARY MANHOLE
SCO EXISTING SANITARY CLEANOUT	SCO PROPOSED SANITARY CLEANOUT
EXISTING STORM MANHOLE	PROPOSED STORM MANHOLE
EXISTING SINGLE / DOUBLE CURB INLET	PROPOSED SINGLE / DOUBLE CURB INLET
EXISTING CATCH BASIN	PROPOSED CATCH BASIN
DCO EXISTING STORM CLEANOUT	DCO PROPOSED STORM CLEANOUT
EXISTING TELEPHONE MANHOLE	PROPOSED TELEPHONE MANHOLE
DCO EXISTING TELEPHONE PEDESTAL	PROPOSED TELEPHONE PEDESTAL
EXISTING FIRE HYDRANT	PROPOSED FIRE HYDRANT
EXISTING WATER METER	PROPOSED WATER METER
WV EXISTING WATER VALVE	WV PROPOSED WATER VALVE
EXISTING BUSHES / TREES	REMOVE EXISTING BUSH / TREE
BM# EXISTING SURVEY BENCHMARK	PROPOSED SLOPE DIRECTION
TB B# TEST BORING LOCATION	

verdantas
300 BUTTERMILK PIKE, SUITE 332
FORT MITCHELL, KENTUCKY 41017
TEL. (859) 525-0544
WWW.VERDANTAS.COM

NO	REVISION	DATE
-	-	

ISSUED FOR: BIDDING
ISSUE DATE: 07/30/26
SCALE: AS NOTED
DESIGNED BY: DGAR
DRAWN BY: DGAR
CHECKED BY: JSHU

SOUTHGATE COMMUNITY CENTER PARKING LOT RECONSTRUCTION
CITY OF SOUTHGATE
CAMPBELL COUNTY, KENTUCKY

NOTES AND LEGEND SHEET

PROJECT NO. 49435
DISCIPLINE: CIVIL
SHEET NAME: C2
SHEET 2 OF 5

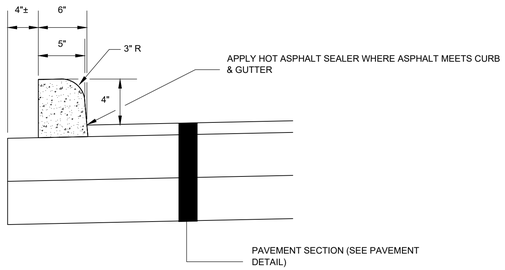

NOTE:
1. CONCRETE CURB TO BE PERMANENTLY BONDED TO BITUMINOUS CONC. BASE USING 2-PART CONCRETE EPOXY.
2. CONCRETE SHALL BE PER THE LATEST EDITION OF THE CAMPBELL COUNTY SUBDIVISION REGULATIONS

CONC. EXTRUDED CURB DETAIL
N.T.S.

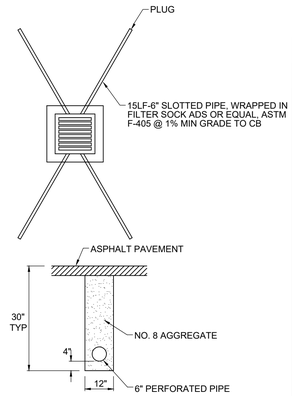

TYPICAL UNDERDRAIN INSTALLED AT EVERY CATCH BASIN

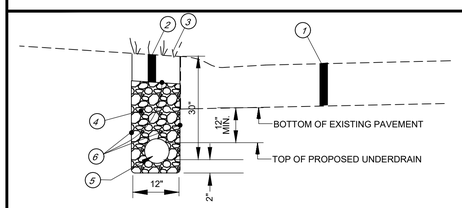

(7) EXISTING PAVEMENT WITH EXTRUDED CURB
(2) ITEM 212 - 6" TOPSOIL
(3) ITEM 212 - SEED AND MULCH
(4) CLEAN NO. 57 CRUSHED STONE (LESS THAN 3% FINES). PLACED AND COMPACTED UP TO 2" ABOVE BOTTOM OF CURB.

(5) ITEM 705 - 6" RIGID PERFORATED PVC PIPE UNDERDRAIN (PERFORATIONS DOWN - MATCH EXISTING STREET GRADE - 1% MIN. SLOPE)
(6) MIRAFI 140N OR EQUIVALENT NON WOVEN DRAINAGE GEOTEXTILE - CONSTRUCT AROUND BOTTOM AND SIDES OF TRENCH, ALSO LAPPED OVER TOP OF STONE BACKFILL.

NOTE: ALL COST FOR CONSTRUCTING THE UNDERDRAIN PER DETAIL SHALL BE INCIDENTAL TO THE UNIT PRICE BID FOR ITEM 705 - 4" UNDERDRAIN.

UNDERDRAIN DETAIL

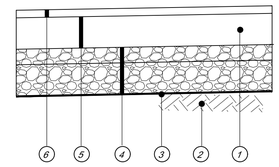

PROPOSED ASPHALT PAVEMENT REPLACEMENT WITH GRANULAR BASE

(1) ITEM 203 - REMOVE EXISTING ROADWAY INCLUDING EXISTING CURB.
(2) ITEM 207 - SUBGRADE RESHAPING & COMPACTING. SUBGRADE SHALL BE TRIMMED AND ROLLED SMOOTH FOR DRAINAGE SO GEOTEXTILE CAN BE SPREAD SMOOTH, TAUT AND EVEN BEFORE STONE IS PLACED. SUBGRADE SLOPE TO MATCH PROPOSED PAVEMENT SLOPE.
(3) ITEM 214 - WOVEN TEXTILE, MIRAFI 600X OR EQUIVALENT, ALL OVERLAPS TO BE 18" MIN.
(4) ITEM 302 - 7" OF CRUSHED STONE BASE (LESS THAN 7% FINES) COMPACTED TO 98% MAX. DRY DENSITY
(5) ITEM 402/403 - 5" OF ASPHALT BASE COURSE (PLACED IN TWO 2-1/2" LIFTS)
(6) ITEM 402/403 - 1.5" ASPHALT SURFACE COURSE WITH ARAMID FIBER REINFORCEMENT (FORTA-FI OR ACE FIBER)
(7) ITEM 302/SPL** VARIABLE THICKNESS (4" - 8") CRUSHED STONE BASE, (LESS THAN 7% FINES) FOR SUBGRADE REPAIR
(8) ITEM SPL** - GEOGRID (TENSAR BX-1200 OR EQUIVALENT), PLACE ON TOP OF WOVEN GEOTEXTILE

*NOTE:

SUBGRADE RESHAPING AND COMPACTING SHALL BE PER KTC ITEM 207. A PROOF ROLL WILL BE REQUIRED PRIOR TO PLACING STONE BASE OR WOVEN GEOTEXTILE FABRIC. SOFT OR YIELDING SUITABLE SUBGRADE MATERIAL LACKING PROPER COMPACTION OR MOISTURE CONTENT SHALL SCARIFIED, AERATED, DRIED, AND RECOMPACTED. SOFT OR YIELDING UNSUITABLE SUBGRADE SHALL BE REMOVED AND REPLACED PER THE "PAVEMENT REPLACEMENT W/ EDGE DRAIN AND GEOGRID REINFORCEMENT" DETAIL, AS DIRECTED BY THE ENGINEER.

** - CONTINGENCY ITEM TO BE USED ONLY AS DIRECTED BY THE ENGINEER

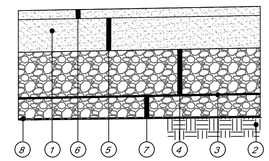

GEOGRID REINFORCEMENT AND GRAVEL BASE FOR SUBGRADE REPAIR
CONTINGENCY ITEMS TO BE USED ONLY AS DIRECTED BY THE ENGINEER
N.T.S.

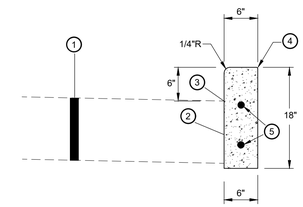

(1) EXISTING PAVEMENT & RESURFACING (SEE TYPICAL SECTIONS)
(2) SAWCUT & REMOVE EXISTING CURB
(3) APPLY HOT ASPHALT SEALER WHERE ASPHALT MEETS CURB (INCIDENTAL TO ITEM 402).
(4) TOP OF REPLACEMENT CURB TO MATCH LINE & GRADE OF EXIST. CURB
(5) 3/4" DIA. DOWELS 18" LONG - DRILL 9" MIN. INTO EXIST. CURB

* NOTE: THIS IS A CONTINGENCY ITEM TO BE USED ONLY AT THE DIRECTION OF THE ENGINEER LIMITS TO BE MARKED IN THE FIELD BY THE ENGINEER.

NOTE: CONTRACTOR SHALL FILL BEHIND CURB TO THE TOP OF THE CURB w/ TOPSOIL AND RESTORE YARD w/ SEED/MULCH. THE COST FOR TOPSOIL, SEED/MULCH SHALL BE INCIDENTAL TO THE UNIT PRICE BID FOR CURB REPLACEMENT.

CONCRETE SHALL BE PER THE LATEST EDITION OF THE CAMPBELL COUNTY SUBDIVISION REGULATIONS

6" VERTICAL CURB REPLACEMENT
N.T.S.

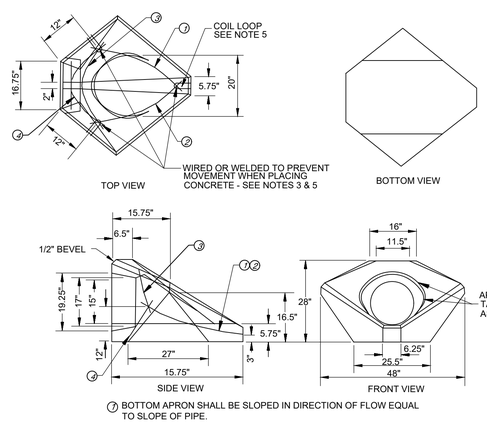

(7) BOTTOM APRON SHALL BE SLOPED IN DIRECTION OF FLOW EQUAL TO SLOPE OF PIPE.
(2) DIMENSIONS AND QUANTITIES ARE BASED ON STEEL PIPE AND WILL VARY SLIGHTLY FOR CONCRETE PIPE.
(3) DIMENSIONS FROM FACE OF CONCRETE TO STEEL SHALL BE 2" CLEAR DISTANCE.
(4) HEADWALL LOCATED AT EDGE OF SHOUDER SHALL BE PARALLEL TO CENTERLINE OF ROAD.
(5) ENCIRCLED LETTERS, , INDICATE STEEL BAR LOCATIONS. EITHER WIRED OR WELDED AT 3 - 1" X 6" COIL LOOPS AS SHOWN IN TOP AND SIDE VIEWS. SEE NOTE 3.
(6) USE CLASS "A" CONCRETE (KY) - APPROX. .35 CU. YARD
(7) REINF. STTEL APPROX 13' OR 4.9 LBS. MINIMUM GRADE 40
(8) APPROX. COMPLETE WEIGHT 1365 LBS.

LOW PROFILE HEADWALL

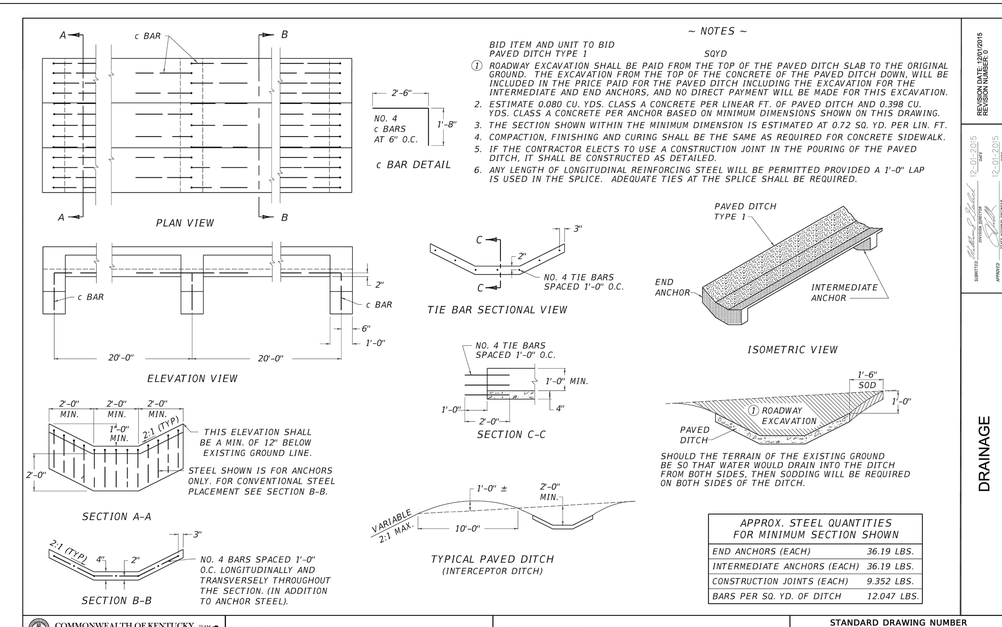

~ NOTES ~

BID ITEM AND UNIT TO BID PAVED DITCH TYPE 1	SQYD
(1) ROADWAY EXCAVATION SHALL BE PAID FROM THE TOP OF THE PAVED DITCH SLAB TO THE ORIGINAL GROUND. THE EXCAVATION FROM THE TOP OF THE CONCRETE OF THE PAVED DITCH DOWN, WILL BE INCLUDED IN THE PRICE PAID FOR THE PAVED DITCH INCLUDING THE EXCAVATION FOR THE INTERMEDIATE AND END ANCHORS, AND NO DIRECT PAYMENT WILL BE MADE FOR THIS EXCAVATION.	

2. ESTIMATE 0.080 CU. YDS. CLASS A CONCRETE PER LINEAR FT. OF PAVED DITCH AND 0.398 CU. YDS. CLASS A CONCRETE PER ANCHOR BASED ON MINIMUM DIMENSIONS SHOWN ON THIS DRAWING.
3. THE SECTION SHOWN WITHIN THE MINIMUM DIMENSION IS ESTIMATED AT 0.72 SQ. YD. PER LIN. FT.
4. COMPACTION, FINISHING AND CURING SHALL BE THE SAME AS REQUIRED FOR CONCRETE SIDEWALK.
5. IF THE CONTRACTOR ELECTS TO USE A CONSTRUCTION JOINT IN THE POURING OF THE PAVED DITCH, IT SHALL BE CONSTRUCTED AS DETAILED.
6. ANY LENGTH OF LONGITUDINAL REINFORCING STEEL WILL BE PERMITTED PROVIDED A 1'-0" LAP IS USED IN THE SPLICE. ADEQUATE TIES AT THE SPLICE SHALL BE REQUIRED.

APPROX. STEEL QUANTITIES FOR MINIMUM SECTION SHOWN	
END ANCHORS (EACH)	36.19 LBS.
INTERMEDIATE ANCHORS (EACH)	36.19 LBS.
CONSTRUCTION JOINTS (EACH)	9.352 LBS.
BARS PER SQ. YD. OF DITCH	12.047 LBS.

DRAINAGE

COMMONWEALTH OF KENTUCKY
DEPARTMENT OF HIGHWAYS

DITCHING	PAVED DITCH TYPE 1	STANDARD DRAWING NUMBER RDD-001-06

OpenRoads Designer v23.00.01.11 USER: matthew.alpee FILE NAME: C:\KYTC_STANDARDS\ORGANIZATION-CIVIL\KYTC_STANDARDS_OD_KYTCODGNLIB\SHEET BIB\DRAWYTC STANDARDS BORDER BIBED.DGNLIB

PAVED DITCH TYPE 1 DETAIL

verdantas
300 BUTTERMILK PIKE, SUITE 332
FORT MITCHELL, KENTUCKY 41017
TEL. (859) 525-0544
WWW.VERDANTAS.COM

NO	REVISION	DATE
-	-	

BIDDING	
ISSUED FOR:	
ISSUE DATE:	07/30/26
SCALE:	AS NOTED
DESIGNED BY:	DGAR
DRAWN BY:	DGAR
CHECKED BY:	JSHU

REVISION DATE: 03/12/2015
REVISION NUMBER: 0

SUBMITTED: Matthew A. Alpee 12-31-2015 PROJECT MANAGER DATE
APPROVED: Kevin Lawrence 12-31-2015 PROJECT MANAGER DATE

SOUTHGATE COMMUNITY CENTER PARKING LOT RECONSTRUCTION
CITY OF SOUTHGATE
CAMPBELL COUNTY, KENTUCKY

DETAIL SHEET

PROJECT NO.	
49435	
DISCIPLINE	
CIVIL	
SHEET NAME	
C3	
SHEET	OF
3	5

Z:\PROJECT FILES\BA-TZ\SOUTHGATE\49435 - SOUTHGATE COMMUNITY CENTER PARKING LOT\CAD\DWG\BASE\49435 C BASE.DWG - C3 DETAIL SHEET 2 - 7/27/2026 9:41:59 AM - EVERETT GARRETT

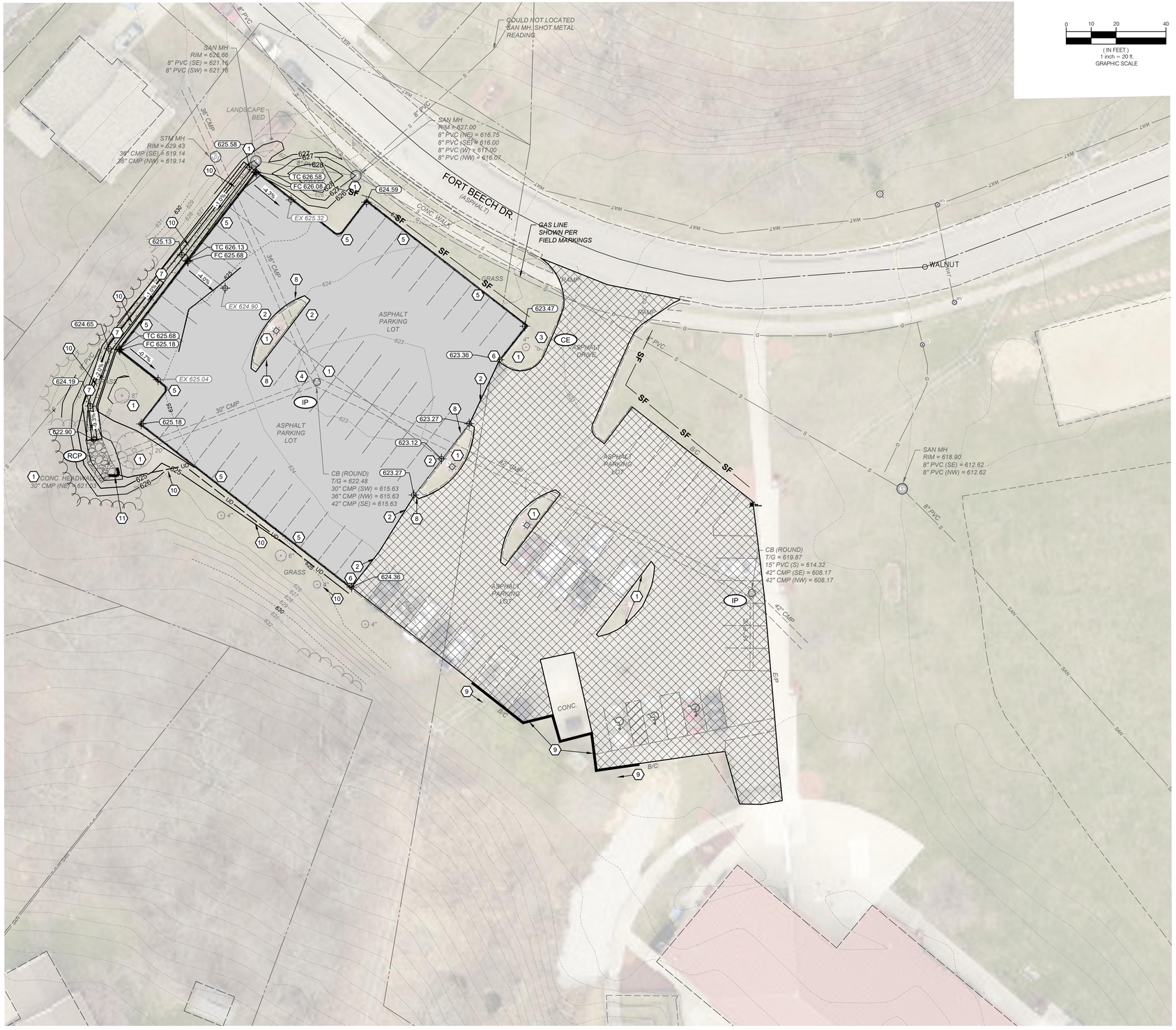

CONSTRUCTION NOTES

1. DO NOT DISTURB
2. SAWCUT AND REMOVE EXISTING PAVEMENT TO CREATE A CLEAN JOINT FOR NEW PAVEMENT CONSTRUCTION.
3. REMOVE, SALVAGE, & REINSTALL/RELOCATE EXIST. SIGN OR MAILBOX (INCIDENTAL TO ITEM 202 - CLEARING AND GRUBBING).
4. INSTALL UNDERDRAINS AT CATCH BASIN PER DETAIL (SHEET 3).
5. INSTALL CONCRETE EXTRUDED CURB TO MATCH EXISTING CURB PER DETAIL SHEET 3
6. TRANSITION TO MATCH EXISTING CURB AND/OR SIDEWALK OVER 4 FEET.
7. CONSTRUCT CONCRETE SWALE TO DRAIN RUNOFF FROM HILLSIDE. GRADE TO DRAIN AT 1% MIN. TO THE HEADWALL LOW POINT.
8. DO NOT DISTURB. EXISTING CONCRETE CURBING AT ISLANDS TO REMAIN.
9. SAWCUT AND REMOVE EXISTING CURB. CONSTRUCT APPROXIMATELY 95 L.F. OF CONCRETE VERTICAL CURB. SEE DETAIL SHEET 3.
10. CONSTRUCT 215 L.F. OF UNDERDRAIN BEHIND THE CURB IN THE GRASS STRIP PER DETAIL SHEET 3.
11. CONSTRUCT LOW PROFILE HEADWALL PER DETAIL SHEET 3. PR FL=622.03

HATCH LEGEND

- PROPOSED ASPHALT PAVEMENT REPLACEMENT WITH GRANULAR BASE - SEE DETAIL
- PROPOSED ASPHALT RESEAL AND RESTRIPING
- CONCRETE CHANNEL - SEE DETAIL SHEET

EROSION CONTROL LEGEND

- IP — INLET PROTECTION (SEE DETAIL)
- CE — CONSTRUCTION ENTRANCE
- RCP — ROCK CHANNEL PROTECTION
- SF — PROPOSED SILT FENCE

verdantas
300 BUTTERMILK PIKE, SUITE 332
FORT MITCHELL, KENTUCKY 41017
TEL. (859) 525-0544
WWW.VERDANTAS.COM

NO	REVISION	DATE
-	-	

ISSUED FOR:	BIDDING
ISSUE DATE:	07/30/26
SCALE:	AS NOTED
DESIGNED BY:	DGAR
DRAWN BY:	DGAR
CHECKED BY:	JSHU

SOUTHGATE COMMUNITY CENTER PARKING LOT RECONSTRUCTION

CITY OF SOUTHGATE
CAMPBELL COUNTY, KENTUCKY

SITE LAYOUT SHEET

PROJECT NO.	
49435	
DISCIPLINE	
CIVIL	
SHEET NAME	
C4	
SHEET	OF
4	5

Z:\PROJECT FILES\SA-TZ\SOUTHGATE\49435 - SOUTHGATE COMMUNITY CENTER PARKING LOT\CAD\DWG\BASE\49435 C BASE.DWG - C4 SITE LAYOUT - 7/27/2026 9:41:59 AM - EVERETT GARRETT

STORM WATER POLLUTION PREVENTION NOTES

1. SANITATION DISTRICT NO. 1 IS TO BE CONTACTED 72 HOURS PRIOR TO ANY CONSTRUCTION ACTIVITY AT 859-578-6892

2. ALL EROSION AND SEDIMENTATION CONTROL SHALL BE PERFORMED AS SHOWN ON THE PLANS, AND SHALL BE IN COMPLIANCE WITH THE LATEST CONSTRUCTION ACTIVITY " NATIONAL POLLUTANT DISCHARGE ELIMINATION SYSTEM" RULES AND REGULATIONS AND SECTION 02370 OF SD1 SPECIFICATIONS.

3. A COPY OF THE STORM WATER POLLUTION PREVENTION PLAN (SWPPP) AND A COPY OF THE "NOTICE OF INTENT" (NOI) SHALL BE KEPT ON SITE.

4. AN AMENDMENT OF THE SWPPP IS REQUIRED WHENEVER A CHANGE IN DESIGN, CONSTRUCTION, AND OPERATION OR MAINTENANCE HAS A SIGNIFICANT EFFECT ON THE POTENTIAL FOR THE DISCHARGE OF POLLUTANTS, OR IF THE SWPPP PROVES TO BE INEFFECTIVE IN ACHIEVING THE GENERAL OBJECTIVES OF THE SWPPP.

5. THE CONTRACTOR SHALL ALSO MAINTAIN THE FOLLOWING RECORDS ON SITE:
   A. GENERAL CONTRACTOR AND/OR SUBCONTRACTOR SWPPP CERTIFICATIONS
   B. THE DATE, TIME, AND EXACT LOCATION OF THE INSPECTION, AND THE NAME OF THE INSPECTOR
   C. AN ASSESSMENT OF THE CONDITION OF THE EROSION CONTROLS
   D. A DESCRIPTION OF ANY EROSION CONTROL IMPLEMENTATION AND MAINTENANCE PERFORMED
   E. A DESCRIPTION OF THE PRESENT PHASE OF CONSTRUCTION AT THE SITE

6. CONSTRUCTION SEQUENCE
   - ALL PERIMETER SILT FENCE, INLET PROTECTION AND OTHER EROSION CONTROLS SHALL BE IN PLACE BEFORE ANY OTHER EARTH MOVING ACTIVITIES BEGIN.
   - THE CONTRACTOR SHALL CLEAR AND GRUB ONLY THE AREAS PLANNED FOR EARTH MOVING.
   - REMOVE TOPSOIL, STOCKPILE IT, AND INSTALL SILT FENCE AROUND PERIMETER.
   - SEED SOIL STOCKPILE WITH PERENNIAL RYE GRASS AND MULCH WITH STRAW IF NO TO BE DISTURBED FOR MORE THAN 21 DAYS.
   - INSTALL STORM SEWER SYSTEM AND SURFACE STORM INLET AND MANHOLE PROTECTION WHERE REQUIRED.
   - ESTABLISH A TEMPORARY SEEDING ON ALL BARE AREAS THAT ARE TO REMAIN UNDISTURBED FOR MORE THAN 21 DAYS. SEED WITH PERENNIAL RYE GRASS MULCH WITH STRAW.
   - IMMEDIATE AFTER TOPSOIL HAS BEEN PLACED, STABILIZE THE SAME SURFACE AREA WITH FINAL SEED AND MULCH 7 DAYS AFTER REACHING FINAL GRADE.
   - AFTER THE VEGETATION HAS BECOME WELL ESTABLISHED, REMOVE TEMPORARY EROSION OR SEDIMENT CONTROL PRACTICES.

7. EROSION CONTROLS MUST BE INSPECTED ONCE EVERY 7 DAYS AND WITHIN 24 HOURS OF 0.5" OR GREATER RAINFALL. REMOVE ACCUMULATED SEDIMENT FROM EROSION CONTROLS.

8. TEMPORARY SEEDING SHALL BE PERENNIAL RYE GRASS (40 LB / ACRED) AND MULCH AT 3 BALES OF STRAW PER 1000 S.F.

9. CONTRACTOR IS RESPONSIBLE FOR OBTAINING BORROW MATERIAL ONSITE AND / OR DISPOSING OF EXCESS MATERIAL OFF SITE AS REQUIRED TO MEET INDICATED DESIGN ELEVATIONS.

10. DEBRIS SHALL BE COLLECTED WITHIN PROPERTY LIMITS WEEKLY OR AS NEEDED FOR PUBLIC SAFETY. SURROUNDING STREETS AFFECTED BY THE CONSTRUCTION SHALL BE CLEANED DAILY OR AS NEEDED FOR PUBLIC SAFETY. SEE CONSTRUCTION ENTRANCE DETAIL IN SWPPP DETAILS SHEET.

11. THE CONSTRUCTION OF BMPs SHALL BE REVISED OR ADDED IF DEEMED NECESSARY PER SECTION 1000 OF THE SANITATION DISTRICT 1 REGULATIONS.

12. CONTACT SANITATION DISTRICT NO. 1 72 HOURS PRIOR TO INSTALLATION OF THE WATER QUALITY FEATURE.

NOTES:

1) SUBSOILING SHALL OCCUR WHEN SOIL MOISTURE IS LOW ENOUGH TO ALLOW THE SOIL TO CRACK OR FRACTURE. SUBSOILING IS NOT PERMITTED ON SLIP-PRONE AREAS.
2) THE SITE SHALL BE GRADED TO PERMIT THE USE OF CONVENTIONAL EQUIPMENT FOR SEEDBED PREPARATION AND SEEDING.
3) TOPSOIL SHALL BE APPLIED WHERE NEEDED TO ESTABLISH VEGETATION.
4) THE SEEDBED SHALL BE PREPARED BY APPLYING AGRICULTURAL GROUND LIMESTONE OR FERTILIZER AS RECOMMENDED BY A SOIL TEST. IN LIEU OF A SOIL TEST, APPLY LIME AT 2 TONS/AC. OR FERTILIZER AT 500 LB/AC. OF 10-10-10 OR 12-12-12 ANALYSIS. LIME AND FERTILIZER SHALL BE WORKED INTO THE SOIL TO A DEPTH OF 3".
5) APPLY SEED UNIFORMLY ON FIRM, MOIST SEED BED.
6) SEEDING SHOULD BE APPLIED FROM MARCH 1 TO MAY 31 OR AUGUST 1 TO SEPTEMBER 30. IF SEEDING OCCURS OUTSIDE OF THESE DATES, ADDITIONAL MULCH AND IRRIGATION MAY BE REQUIRED TO ENSURE A MINIMUM OF 80% GERMINATION. TILLAGE FOR SEEDBED PREPARATION SHALL OCCUR WHEN THE SOIL IS DRY ENOUGH TO CRUMBLE AND NOT FORM RIBBONS WHEN COMPRESSED BY HAND.
7) SEEDING SHOULD NOT BE APPLIED FROM OCTOBER 1 TO NOVEMBER 20 BECAUSE SEEDS MAY GERMINATE BUT WILL NOT SURVIVE THE WINTER. USE THE FOLLOWING METHODS FOR DORMANT SEEDING:
   - FROM OCTOBER 1 TO NOVEMBER 20, INCREASE THE SEEDING RATE BY 50%, PREPARE THE SEED BED, ADD LIME AND FERTILIZER, MULCH AND ANCHOR.
   - FROM NOVEMBER 20 TO MARCH 15, ONLY IF SOIL CONDITIONS PERMIT, INCREASE THE SEEDING RATE BY 50%, PREPARE THE SEED BED, ADD LIME AND FERTILIZER, APPLY THE SEED MIXTURE, MULCH AND ANCHOR.
8) APPLY MULCH MATERIAL IMMEDIATELY AFTER SEEDING.
9) PERMANENT SEEDING SHALL INCLUDE IRRIGATION TO ESTABLISH VEGETATION DURING DRY OR HOT WEATHER OR ON ADVERSE SITE CONDITIONS AS NEEDED. AVOID EXCESSIVE IRRIGATION AND MONITOR TO PREVENT EROSION AND DAMAGE FROM RUNOFF.
10) PERMANENT SEEDING SHALL NOT BE CONSIDERED ESTABLISHED FOR AT LEAST 1 FULL YEAR FROM THE TIME OF PLANTING. DURING THIS PERIOD, INSPECT FOR SOIL EROSION OR PLANT LOSS AND REPAIR BARE OR SPARSE AREAS, FILL GULLIES, RE-FERTILIZE, RE-SEED OR RE-MULCH AS NEEDED.
11) A MINIMUM OF 70% GROWTH DENSITY, BASED ON A VISUAL INSPECTION, MUST EXIST FOR AN ADEQUATE PERMANENT VEGETATIVE PLANTING.
12) ALL SEEDING MIX, FERTILIZER AND MULCH SHALL CONFORM TO SECTION 02370 OF THE SANITATION DISTRICT No. 1 SPECIFICATIONS.

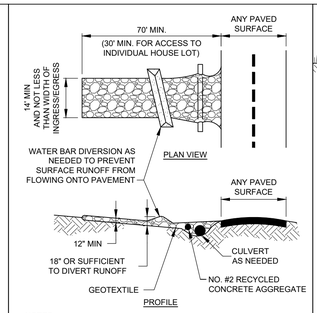

NOTES:

1. PLACE GEOTEXTILE OVER THE ENTIRE AREA PRIOR TO PLACING STONE MEETING THE MIN. SPECIFICATIONS:

A.	TENSILE STRENGTH	= 200 LBS.
B.	PUNCTURE STRENGTH	= 80 PSI
C.	TEAR STRENGTH	= 50 LBS.
D.	BURST STRENGTH	= 320 PSI
E.	ELONGATION	= 20%
F.	EQUIVALENT OPENING SIZE	= 0.6 MM
G.	PERMITTIVITY	= 0.001 CM/SEC

2. APPLY ADDITIONAL STONE AS CONDITIONS DEMAND AND REPLENISH STONE WHEN THE DEPTH IS LESS THAN 6". REMOVE AND REPLACE IF STONES BECOMES MUD-LADEN.
3. IMMEDIATELY REMOVE MUD DROPPED, WASHED OR TRACKED ONTO ROADS OR ANY SURFACE WHERE RUNOFF IS NOT CHECKED BY SEDIMENT CONTROLS BY SCRAPING OR SWEEPING.
4. CONSTRUCTION ENTRANCES SHALL NOT BE RELIED UPON TO REMOVE MUD FROM VEHICLES OR TO PREVENT OFF-SITE TRACKING. VEHICLES THAT ENTER AND LEAVE THE CONSTRUCTION SITE SHALL BE RESTRICTED FROM MUDDY AREAS.

CE **CONSTRUCTION ENTRANCE**
SCALE: NONE

NOTES:

1) THE SEED BED SHALL BE PULVERIZED AND LOOSE TO ENSURE THE SUCCESS OF ESTABLISHING VEGETATION.
2) SOIL AMENDMENTS MAY BE REQUIRED TO ESTABLISH ADEQUATE VEGETATION. PERFORM SOIL TESTS ON THE SITE TO PREDICT THE NEED FOR LIME AND FERTILIZER.
3) APPLY SEED UNIFORMLY. COVER BROADCASTED SEED BY RAKING OR DRAGGING AND THEN LIGHTLY TAMPING INTO PLACE.
4) APPLY MULCHING IMMEDIATELY AFTER SEEDING.
5) SEEDING SHALL BE INSPECTED FOR BARE SPOTS AND WASHOUTS, AND RESEEDED AS NECESSARY.

TEMPORARY SEEDING SPECIES SELECTION			
DATES	SPECIES	LB/1,000 SF	LB/AC.
MARCH 1 TO AUGUST 15	OATS TALL FESCUE PERENNIAL RYEGRASS	3 1 1	128 40 40
	PERENNIAL RYEGRASS TALL FESCUE	2 1	40 40
AUGUST 16 TO NOVEMBER 1	RYE TALL FESCUE PERENNIAL RYEGRASS	3 1 1	112 40 40
	WHEAT TALL FESCUE PERENNIAL RYEGRASS	3 1 1	120 40 40
	PERENNIAL RYEGRASS TALL FESCUE	2 1	40 40
NOVEMBER 1 TO SPRING	ONLY MULCH OR DORMANT SEEDING.		

TEMPORARY SEEDING DETAIL
SCALE: NONE

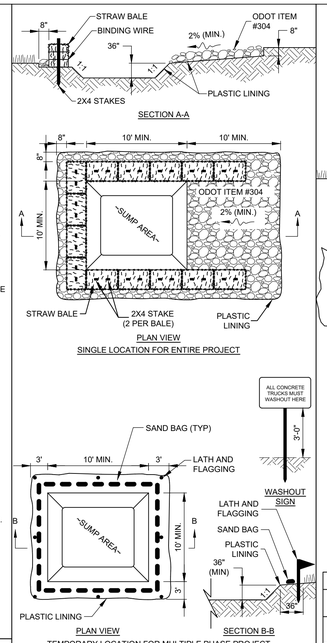

NOTES:

1. WASHOUT PIT SHALL BE LOCATED 100' MINIMUM FROM INLETS, STREAMS, WETLANDS AND ANY OTHER SURFACE WATERS.
2. ALL EXCESS CONCRETE AND CONCRETE WASHOUT, INCLUDING FROM HAND MIXERS AND LIGHT EQUIPMENT, SHALL BE DISPOSED OF IN THE CONCRETE WASHOUT AREA. DISPOSAL OF EXCESS CONCRETE OR CONCRETE WASHOUT ON THE GROUND, OR IN STORM DRAINS, DITCHES OR WATER BODIES, IS PROHIBITED.
3. CONCRETE WASHOUT AREA SHALL BE SUFFICIENT SIZE TO CONTAIN CONCRETE WASTE GENERATED. FOR LARGER SITES, MULTIPLE CONCRETE WASHOUT AREAS MAY BE REQUIRED.
4. IF CONCRETE WASHOUT AREA IS LOCATED AWAY FROM A PAVED SURFACE, CONSTRUCT A GRAVEL ACCESS ROUTE EQUAL IN COMPOSITION TO THE CONSTRUCTION ENTRANCE.
5. PLASTIC LINING SHALL BE DOUBLE-LINED, CONTINUOUS 10-ML POLYETHYLENE SHEETING FREE OF HOLES, TEARS OR OTHER DEFECTS, AND INSTALLED ON A SMOOTH, LEVEL SURFACE, FREE OF ROCKS OR DEBRIS.
6. CONCRETE WASHOUT SIGNAGE SHALL BE CLEARLY VISIBLE AND LOCATED WITHIN 30 FEET OF EACH WASHOUT AREA.
7. CONCRETE WASHOUT AREAS SHALL BE COVERED DURING INCLEMENT WEATHER TO PREVENT OVERFLOWS.
8. PREFABRICATED, PORTABLE AND RE-USABLE CONCRETE WASHOUT CONTAINERS ARE ACCEPTABLE, BUT MUST BE SPECIFICALLY DESIGNED FOR CONCRETE WASHOUT USE.
9. CONCRETE WASHOUT AREA SHALL BE INSPECTED DAILY TO CHECK FOR DAMAGE AND TO DETERMINE IF IT NEEDS CLEANED OR REPLACED. ANY DAMAGE TO THE SIDEWALLS OR POLYETHYLENE SHEETING SHALL BE REPAIRED IMMEDIATELY. THE CONCRETE WASHOUT AREA SHALL BE CLEANED OR REPLACED WHEN IT IS 75% FULL. THE POLYETHYLENE SHEETING SHALL BE REPLACED AFTER EACH CLEANING.
10. SAW CUT CONCRETE, RESIDUE FROM SAW CUT, AND GRINDINGS SHALL BE DISPOSED OF IN THE WASHOUT PIT.

WA **CONCRETE WASHOUT DETAIL**
SCALE: NONE

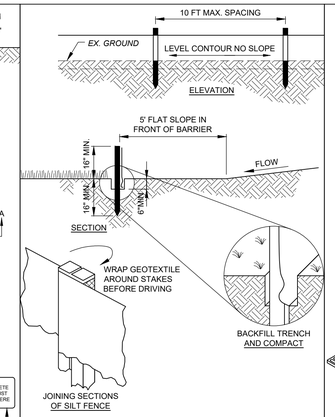

NOTES:

1. PRESERVE VEGETATION FOR 5 FEET, OR AS MUCH AS POSSIBLE, UPSLOPE FROM THE SILT FENCE. IF VEGETATION IS REMOVED, IT SHALL BE RE-ESTABLISHED WITHIN 7 DAYS FROM SILT FENCE INSTALLATION.
2. SILT FENCE SHALL ALLOW RUNOFF TO PASS ONLY AS DIFFUSE FLOW THROUGH THE GEOTEXTILE. PERFORM ONE OF THE FOLLOWING IF RUNOFF OVERTOPS THE SILT FENCE, FLOWS UNDER OR AROUND THE ENDS, OR IN ANY OTHER WAY BECOMES A CONCENTRATED FLOW:
   - CHANGE THE LAYOUT OF THE SILT FENCE.
   - REMOVE ACCUMULATED SEDIMENT.
   - INSTALL OTHER PRACTICES.

FABRIC PROPERTIES	VALUES	TEST METHOD
GRAB TENSILE STRENGTH	90 LB. MIN	ASTM D-1682
MULLEN BURST STRENGTH	190 PSI MIN	ASTM D-3786
SLURRY FLOW RATE	0.3 GAL./MIN./S.F. MAX.	
EQUIVALENT OPENING SIZE	40-80	US STD. SIEVE CW-02215
ULTRAVIOLET RADIATION STABILITY	90% MIN	ASTM-G-26

SF **SILT FENCE**
SCALE: NONE

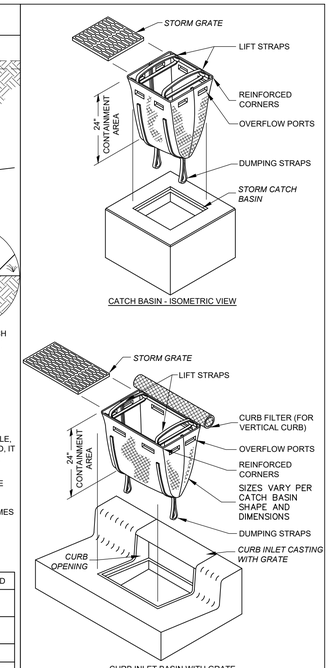

IP **STORM DRAIN INLET PROTECTION DETAIL**
SCALE: NONE

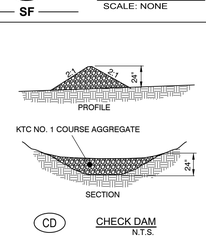

CD **CHECK DAM**
N.T.S.

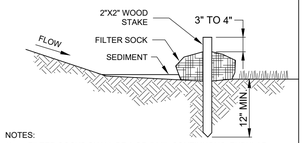

NOTES:

1) FILTER SOCKS SHALL BE 3 OR 5 MIL CONTINUOUS, TUBULAR, HDPE 3/8" KNITTED MESH NETTING MATERIAL, FILLED WITH COMPOST.
2) COMPOST SHALL BE WEED, PATHOGEN AND INSECT FREE, FREE OF ANY REFUSE, CONTAMINANTS OR OTHER MATERIALS TOXIC TO PLANT GROWTH, BE DERIVED FROM A WELL-DECOMPOSED SOURCE OF ORGANIC MATTER, AND CONSIST OF PARTICLES RANGING FROM 3/8" TO 2".
3) FILTER SOCKS SHALL BE PLACED ON A LEVEL LINE ACROSS SLOPES PARALLEL TO THE BASE OF THE SLOPE.
4) FILTER SOCKS SHALL BE PLACED AT LEAST 5' FROM THE TOE OF SLOPE FOR SEDIMENT DEPOSIT.
5) BUILT UP SEDIMENT SHALL BE REMOVED WHEN IT HAS REACHED 1/3 THE FILTER SOCK HEIGHT.
6) WHEN A FILTER SOCK IS NO LONGER REQUIRED, IT SHALL BE DISPERSED ON-SITE.
7) THE MAXIMUM DRAINAGE AREA PER 100 FEET OF FILTER SOCK IS 1/2 ACRE AND IS DEPENDENT ON THE SLOPE:

MAX. SLOPE LENGTH ABOVE FILTER SOCK					
SLOPE	RATIO (H:V)	8"	12"	18"	24"
0% - 2%	0 - 50:1	125'	250'	300'	350'
2% - 10%	50:1 - 10:1	100'	125'	200'	250'
10% - 20%	10:1 - 5:1	75'	100'	150'	200'

FILTER SOCK DETAIL
SCALE: NONE

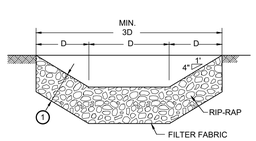

1 24" MIN. CLASS III CHANNEL LINING (RIP RAP)
D= INSIDE PIPE DIAMETER

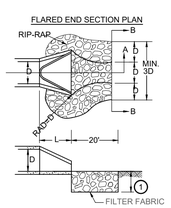

RCP **ROCK CHANNEL PROTECTION**
SCALE: NONE

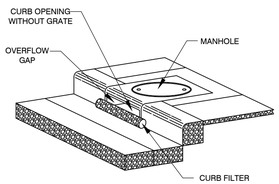

DETAIL OF CURB INLET SEDIMENT CONTROL DEVICE WITH CURB FILTER

IP **DANDY CURB**

verdantas
300 BUTTERMILK PIKE, SUITE 332
FORT MITCHELL, KENTUCKY 41017
TEL. (859) 525-0544
WWW.VERDANTAS.COM

NO	REVISION	DATE
-	-	

ISSUED FOR:	BIDDING
ISSUE DATE:	07/30/26
SCALE:	AS NOTED
DESIGNED BY:	DGAR
DRAWN BY:	DGAR
CHECKED BY:	JSHU

SOUTHGATE COMMUNITY CENTER PARKING LOT RECONSTRUCTION
CITY OF SOUTHGATE
CAMPBELL COUNTY, KENTUCKY

STORM WATER POLLUTION PREVENTION PLAN

PROJECT NO. 49435
DISCIPLINE: CIVIL
SHEET NAME: C5
SHEET 5 OF 5